Flowtecal Group Introduction

Flowtecal Group, established since May 1997 in the United Kingdom (UK). Dedicates to the R&D and manufacturing of world-class automatics valves, manual valves, actuators and other flow control instruments. We provide high quality products and technical total solutions for flow control though our worldwide net-works. "Flowtecal" is an international brand specialize in flow control.

The headquarter of Flowtecal Group in China is in Guangzhou, Guangdong province. And fully taking charge of the sales, technical supports and after-sale services of control valves, manual valves, actuators in greater China region, Asia, Africa and South America. The manufacturing base of Flowtecal in China is Flowtecal Control Valve (Heyuan) Co., Ltd. and manufacturing ball valves , butterfly valves, control valves and actuators under the brands "Flowtecal", "FT" and "孚罗泰", all of which are proprietary trademarks of Flowtecal Group.

Since 1997 till nowadays, Flowtecal has developed into a famous and highly competitive brand in valves and flow control industries, such as: Oil & Gas, Chemical and Refinery, Fine Chemical, Power and Power Station, Metallurgy & Mine, Food & Beverage, Pulp & Paper, Light Industry and general industry.

Flowtecal, with its outstanding and highly cost-effective product ranges, complete production quality management system, rapid and timely after-sales service system, reliable product quality, regular and reassuring tracking service, strong technical support capability, and accurate type selection under various operating conditions, has won approval and trust from our users, which also lays a solid foundation for 'Flowtecal' s future development.

Flowtecal

Our mission::

Pursuing Excellent Flow Control
Creating Perfect Valve Products.

Our core values:

Lofty goals and an open mind,
Adhering to the honesty and trust,
Continuous innovation and high quality products,
Perfect services and outsanding reputation.

Our core strategies:

Focus on R&D, manufacturing, assembly of automatic actuating valves. And provide total solution for flow control systems of various industry. Be dedicated to developments the Flowtecal valve brands and provide our valve products to the world.

FLOWTECAL VALVE (GUANGZHOU) CO., LTD.

CONTENTS

Flowtecal

Model No. of Flowtecal Gate Valve

DN50	G70	01	E	–	W	O	S	M	RF
▼ 1	▼ 2	▼ 3	▼ 4		▼ 5	▼ 6	▼ 7	▼ 8	▼ 9

1 Nominal diameter

DN50 (or 2")

2 Valve model

G70 Flexible disc wedge gate valve
G71 Single disc wedge gate valve
G72 Double disc wedge gate valve
G74 Parallel plate gate valve
G75 Non–rising stem single disc wedge gate valve
G76 Non–rising stem double disc wedge gate valve
G77 Flat gate valve (without diversion hole)
G77P Flat gate valve (with diversion hole)
G79 Forged steel gate valve

3 Valve pressure rating

01 ANSI 150Lb
02 ANSI 300Lb
03 ANSI 600Lb
11 DIN PN10
12 DIN PN16
13 DIN PN25
14 DIN PN40
15 DIN PN64
16 DIN PN100
21 GB PN10 Bar
22 GB PN16 Bar
23 GB PN25 Bar
24 GB PN40 Bar
25 GB PN64 Bar
26 GB PN100 Bar

4Special valve code

Standard valve omiting this code
F PFA Lining
F_{46} F_{46} Lining
E EPDM Coating
N NBR Coating
J PA Coating

5 Body material

D Ductile iron
W A216–WCB
0 CF8 / 304SS
1 CF8M / 316SS
2 CF3M / 316L
3 2205 Duplex stainless steel
4 2507 Duplex stainless steel
6 WC6
7 WC9
V 12Cr1MoV

6 Disc material

D Ductile iron
W A216–WCB
0 CF8 / 304SS
1 CF8M / 316SS
2 CF3M / 316L
3 2205 Duplex stainless steel
4 2507 Duplex stainless steel
6 WC6
7 WC9
V 12Cr1MoV

7 Stem material

W 45#steel
S 420SS or 2Cr13
H 17–4PH
0 304SS
1 316SS
5 Other material

8 Seat material

M Hardening treatment
0 304SS
1 316SS
S Stellite
E EPDM
N NBR

9 Connection

RF
TG
BW

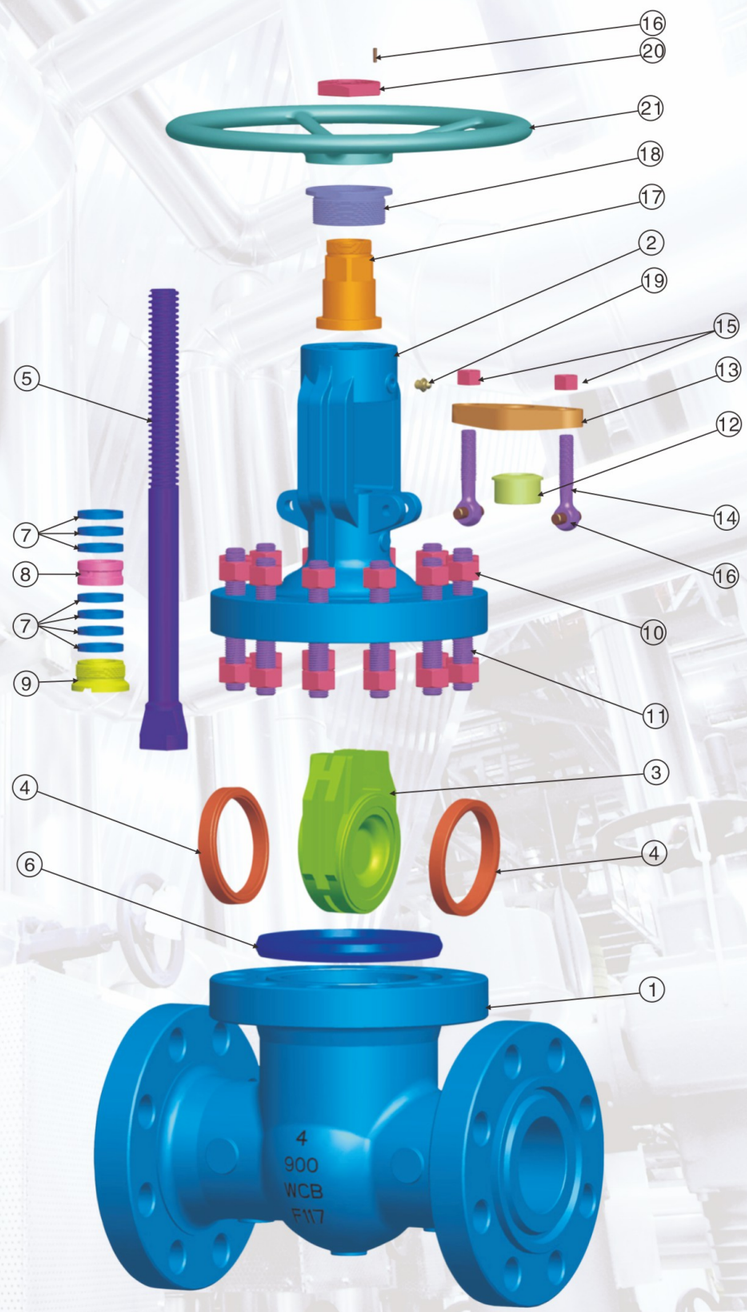

Flowtecal
Gate Valve Structure

Features

This series of cast steel gate valves are widely used on working condition of PN1.6~42.0MPa (CL150~CL2500) and the working temperature of -46~600℃, such as petroleum, chemical, thermal power plants and other conditions of pipeline, with the function of cutting off or turning on the pipeline media.

The main structural features :

1. Reasonable product structure, excellent sealing , good performance, attractive appearance;
2. The sealing surface is welded with Co based carbide which have good performance in wear resistance, corrosion resistance, scratch resistance, long service life;
3. The stem have been treated with the quenching tempering and nitriding treatment, which have good corrosion resistance and scratch resistance;
4. The valve has back seal structure with good sealing;
5. The material of components and flange, butt-welded dimension are designed and selected according to actual conditions or reasonable requirements of end user , to meet the needs of various projects.

Major Parts

No.	Name	No.	Name
1	Body	12	Packing Plate
2	Bonnet	13	Eyelet Bolt
3	Gate	14	Nut
4	Seat	15	Cylindrical Pin
5	Stem	16	Stem
6	Middle Flange Gasket	17	Nut Gland
7	Packing Space Ring	18	Nut
8	Back Seal	19	Grease Injection
9	Nut	20	Lock Nut
10	Stud	21	Hand-wheel
11	Packing Bushing	-	-

Application

Wedge gate valves are widely used in Petroleum, chemical, power plants, oil, steam and other types of pipeline, working as an On/Off valves flow control pipeline.

Features

1. Compact structure, reasonable design, good rigidity, smooth channel, small flow coefficient;
2. Adopt stainless steel or carbide on sealing surface, and with long service life ;
3. Using flexible graphite for packing, good sealing, and smooth operating;
4. The valve driving :manual, pneumatic, electric, chain gear, hydraulic;
5. The structure of gate: flexible single wedge gate, solid single wedge gate and double gate type.

Standard

Design & Manufacture	Design Standard	Face-to-Face	End Connection	Inspection and Testing	Pressure -Temperature
	GB/T12234	GB/T12221	JB/T 79 GB/T9113 HG/T20592	GB/T 13927 JB/T9092	GB/T 12224

Performance Specification

1. Test Pressure

Nominal Pressure (MPa)	Shell	Test Pressure(MPa)		Back Seat
		Seal (Liquid)	Seal (Gas)	
1.6	2.4	1.8	0.6	1.8
2.5	3.8	2.8	0.6	2.8
4.0	6.0	4.4	0.6	4.4
6.4	9.6	7.0	0.6	7.0
10.0	15.0	11.0	0.6	11.0
16.0	24.0	18.0	0.6	18.0

2. Applicable medium and temperature

Body Material	Service	Temperature(℃)
WCB	Water, Steam, Oil,	≤425
304SS	Nitrate Class	≤200
316SS	Acetic Acid	≤200
WC 9	Water, Steam, Oil	≤550

Parts and Materials

Body, Bonnet, Gate	Stem	Sealing Surface	Gasket (Ring)	Packing	Working temperature(℃)	Applicable Medium
WCB	2Cr13	13Cr STL Body material PTFE Nylon	Reinforced flexible graphite 13Cr/ Flexible graphite SFB-2 08 Titanium steel F304 F316 F304L F316L	Flexible graphite Reinforced flexible graphite SFB/260 SFP/260 PTFE	≤425	Water, Steam, Oil,
WC1	38CrMoAl 25Cr2MoV				≤450	
WC6					≤540	
WC9					≤570	
C5 C12					≤540	
CF8	F304				≤600	Nitric Acid, Acetic Acid, Urea
CF3	F316					
CF8M	F304L					
CF3M	F316L					

Flowtecal
GB Series Wedge Gate Valve

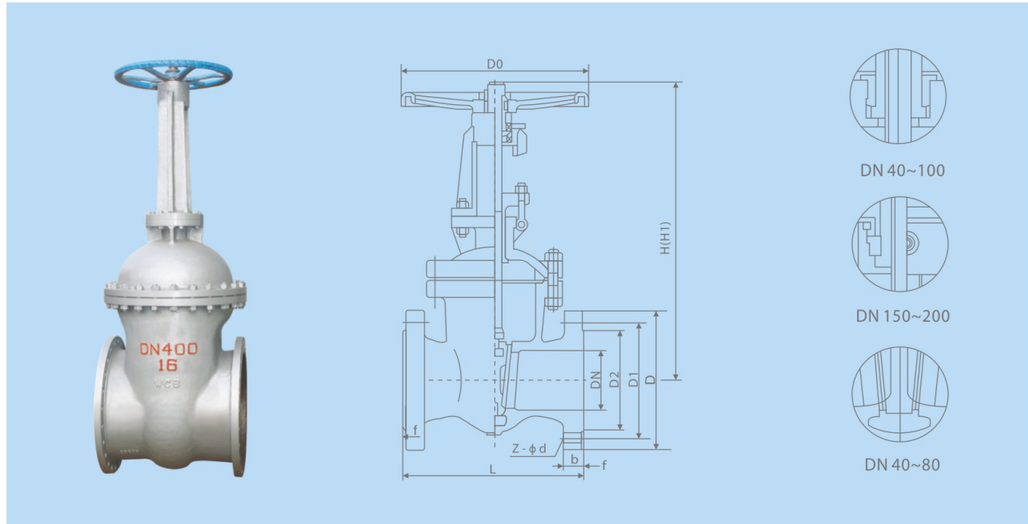

Dimensions

(PN1.0MPa)

DN(mm)	L	D	D1	D2	b–f	z–ϕd	H
G7021、G7121、G7621							
15	130	95	65	45	12-2	4-ϕ14	185
20	150	105	75	55	14-2	4-ϕ14	200
25	160	115	85	65	14-2	4-ϕ14	225
32	180	135	100	78	16-2	4-ϕ18	275
40	166	145	110	85	16-3	4-ϕ18	290
50	180	160	125	100	16-3	4-ϕ18	345
65	195	180	145	120	18-3	4-ϕ18	360
80	210	196	160	135	18-3	4-ϕ18	380
100	230	215	180	155	20-3	8-ϕ18	430
125	256	245	210	185	22-3	8-ϕ18	520
150	280	280	240	210	22-3	8-ϕ23	600
200	330	335	295	265	22-3	8-ϕ23	765
250	380	390	350	320	24-3	12-ϕ23	930
300	420	440	400	368	26-3	12-ϕ23	1080
350	450	500	460	428	26-4	16-ϕ23	1200
400	480	565	515	482	26-4	16-ϕ35	1400
450	510	615	656	532	26-4	20-ϕ25	1500
500	540	670	620	585	28-4	20-ϕ25	1630
600	600	780	725	685	28-5	20-ϕ30	1830
700	600	896	840	800	30-5	24-ϕ30	1930

Dimensions

(PN1.6MPa)

DN(mm)	L	D	D1	D2	b-f	z-ϕd	H
G7022、G7122、G7622							
15	130	95	65	45	14-2	4-ϕ14	185
20	150	105	75	55	14-2	4-ϕ14	200
25	160	115	85	65	14-2	4-ϕ14	225
32	180	135	100	78	16-2	4-ϕ18	275
40	200	145	110	85	16-3	4-ϕ18	295
50	250	160	125	100	16-3	4-ϕ18	350
65	265	180	145	120	18-3	4-ϕ18	370
80	280	195	160	135	20-3	8-ϕ18	390
100	300	215	180	155	20-3	8-ϕ18	435
125	325	245	210	185	22-3	8-ϕ18	520
150	350	280	240	210	24-3	8-ϕ23	610
200	400	335	295	265	26-3	12-ϕ23	785
250	450	405	355	320	20-3	12-ϕ25	960
300	500	460	410	375	30-4	12-ϕ25	1080
350	550	520	470	435	34-4	16-ϕ25	1200
400	600	580	525	485	36-4	16-ϕ30	1400
450	650	640	585	545	40-4	20-ϕ30	1500
500	700	705	650	608	44-4	20-ϕ34	1630
600	800	840	770	718	48-5	20-ϕ41	1830
700	900	910	840	788	50-5	24-ϕ41	1930
800	1000	1020	950	898	52-5	24-ϕ41	2030
900	1100	1120	1050	998	54-5	28-ϕ41	2130
1000	1200	1255	1170	1110	56-5	28-ϕ48	2230

Flowtecal
GB Series Wedge Gate Valve

Dimensions

(PN2.5MPa)

DN(mm)	L	D	D1	D2	b-f	z-ϕd	H
G7023、G7123、G7623							
15	130	95	65	45	16-2	4-ϕ14	185
20	150	105	75	55	16-2	4-ϕ14	200
25	160	115	85	65	16-2	4-ϕ14	225
32	180	135	100	78	18-2	4-ϕ18	275
40	200	145	110	85	18-3	4-ϕ18	295
50	250	160	125	100	20-3	4-ϕ18	350
65	265	180	145	120	22-3	8-ϕ18	370
80	280	195	160	135	22-3	8-ϕ18	390
100	300	230	190	160	24-3	8-ϕ23	435
125	325	270	220	188	28-3	8-ϕ25	520
150	350	300	250	218	30-3	8-ϕ25	610
200	400	360	310	278	34-3	12-ϕ25	785
250	450	425	370	332	36-3	12-ϕ30	930
300	500	485	430	390	40-4	16-ϕ30	1080
350	550	550	490	448	44-4	16-ϕ34	1250
400	600	610	550	505	48-4	16-ϕ34	1430
450	650	660	600	555	50-4	20-ϕ34	1520
500	700	730	660	610	52-4	20-ϕ41	1650
600	800	840	770	718	56-5	20-ϕ41	1850
700	900	955	875	815	60-5	24-ϕ48	1950
800	1000	1070	990	930	64-5	24-ϕ48	2050
900	1100	1180	1090	1025	66-5	28-ϕ54	2150
1000	1200	1305	1210	1140	68-5	28-ϕ58	2250

Dimensions

(PN4.0MPa)

DN(mm)	L	D	D1	D2	b-f	Z-ϕd	H
G7024、G7124、G7624							
15	130	95	65	45	16-2	4-ϕ14	185
20	150	105	75	55	16-2	4-ϕ14	200
25	160	115	85	65	16-2	4-ϕ14	225
32	180	135	100	78	18-2	4-ϕ18	275
40	200	145	110	85	18-3	4-ϕ18	295
50	250	160	125	100	20-3	4-ϕ18	350
65	280	180	145	120	22-3	8-ϕ18	370
80	310	195	160	135	22-3	8-ϕ18	390
100	350	230	190	160	24-3	8-ϕ23	435
125	400	270	220	188	28-3	8-ϕ25	520
150	450	300	250	218	30-3	8-ϕ25	610
200	550	375	320	282	38-3	12-ϕ30	970
250	650	445	385	345	42-3	12-ϕ34	930
300	750	510	450	408	46-4	16-ϕ34	1080
350	850	570	510	465	52-4	16-ϕ34	1250
400	950	655	585	535	58-4	16-ϕ41	1460
450	1050	680	610	560	60-4	20-ϕ41	1520
500	1150	755	670	612	62-4	20-ϕ48	1650
600	1350	890	795	730	62-5	20-ϕ54	1850

Dimensions

(PN6.4MPa)

DN(mm)	L	D	D1	D2	b-f	Z-ϕd	H
G7025、G7125、G7625							
15	170	105	75	55	18-2	4-ϕ14	185
20	190	125	90	68	20-2	4-ϕ18	200
25	210	135	100	78	22-2	4-ϕ18	225
32	230	150	110	82	24-2	4-ϕ23	380
40	240	165	125	96	24-3	4-ϕ23	300
50	250	175	135	105	26-3	4-ϕ23	360
65	280	200	160	130	28-3	8-ϕ23	385
80	310	210	170	140	30-3	8-ϕ23	400
100	350	250	200	168	32-3	8-ϕ25	450
125	400	296	240	202	36-3	8-ϕ30	540
150	450	340	280	240	38-3	8-ϕ34	630
200	550	405	345	300	44-3	12-ϕ34	820
250	650	470	400	352	48-3	12-ϕ41	960
300	750	530	460	412	54-4	16-ϕ41	1130
350	850	595	525	475	60-4	16-ϕ41	1300
400	950	970	585	525	66-4	16-ϕ48	1450
450	1050	715	630	570	70-4	20-ϕ48	1550
500	1150	800	705	640	70-4	20-ϕ54	1680
600	1350	930	820	750	76-5	20-ϕ58	1900

Dimensions

(PN10.0MPa)

DN(mm)	L	D	D1	D2	b-f	Z-ϕd	H
G7026、G7126、G7626							
15	170	105	75	55	20-2	4-ϕ14	185
20	190	125	90	68	22-2	4-ϕ18	200
25	210	135	100	78	24-2	4-ϕ18	225
32	230	150	110	82	24-2	4-ϕ23	280
40	240	165	125	95	26-3	4-ϕ23	300
50	250	196	145	112	28-3	4-ϕ25	360
65	280	220	170	138	32-3	8-ϕ25	385
80	310	230	180	148	34-3	8-ϕ25	400
100	350	265	210	172	38-3	8-ϕ30	450
125	400	310	250	210	42-3	8-ϕ34	450
150	450	350	290	250	46-3	12-ϕ34	630
200	550	430	360	312	54-3	12-ϕ41	820
250	650	500	430	382	60-3	12-ϕ41	960
300	750	585	500	442	70-4	16-ϕ48	1130
350	850	655	560	498	46-4	16-ϕ54	1300
400	950	715	620	558	80-4	16-ϕ54	1450
450	1050	770	675	615	84-4	16-ϕ58	1550
500	1150	870	760	690	90-5	20-ϕ58	1880

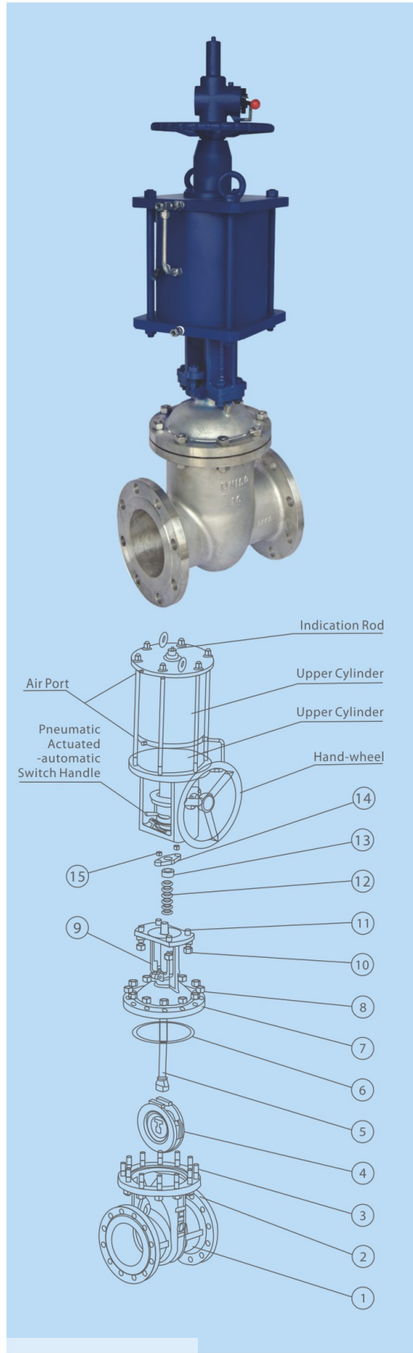

Technical Regulation

Standard	GB Series	ANSI Series
Design Standard	GB/12234	ANSI B16.34
Face-to-Face	GB/12221	ANSI B16.10
End Connection	GB/9113、JB/T79	ANSI B16.5(2~24") ANSI B16.47(26~32")
Inspection and Testing	JB/T9092	API 598

Note: The face to face length and flange dimension can be designed and produced according to the user's requirements.

Parts and Materials

No.	Parts Name	Material		
1	Body	WCB	CF8	CF8M
2	Nut	35	304	304
3	Bolt	35	304	304
4	Gate	WCB	CF8	CF8M
5	Stem	420	304	316
6	Gasket	SS+Flexible graphite、PTFE		
7	Bonnet	WCB	CF8	CF8M
8	Nut	35	304	304
9	Eyebolt	35	304	304
10	Nut	35	304	304
11	Bolt	35	304	304
12	Packing	Flexible Graphite、PTFE		
13	Packing Sleeve	WCB	CF8	CF8M
14	Packing Plate	WCB	CF8	CF8M
15	Nut	35	304	304

Note: The material of major parts and sealing surface can be designed and selected according to the working condition or the special requirement of user.

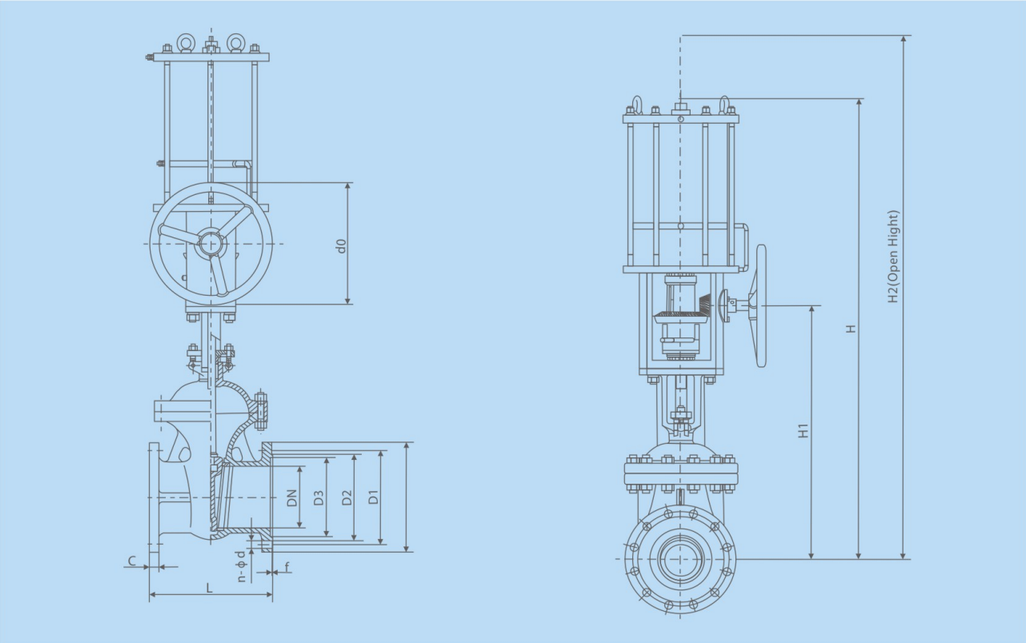

Dimensions

(PN16MPa)

Nominal Diameter (mm)	Overall Dimension					Connection Dimension					
	L	H	H1	H2	ϕd0	D	D1	D2	C	f	n-ϕd
50	250	790	420	840	180	165	125	99	20	3	4-ϕ18
80	280	910	460	990	200	200	160	132	20	3	8-ϕ18
100	300	1050	560	1150	250	220	180	156	22	3	8-ϕ18
150	350	1240	660	1390	320	285	240	211	24	3	8-ϕ22
200	400	1520	810	1720	400	340	295	266	24	3	12-ϕ22
250	450	1700	930	1950	400	405	355	319	26	3	12-ϕ26
300	500	1930	1090	2230	450	460	410	370	28	4	12-ϕ26
350	550	2160	1230	2510	450	520	470	429	30	4	16-ϕ26
400	600	2330	1360	2730	500	580	525	480	32	4	16-ϕ30
450	650	2540	1510	2990	500	640	585	548	34	4	20-ϕ30
500	700	2750	1660	3250	550	715	640	609	36	4	20-ϕ33
600	800	3080	1910	3680	550	840	770	720	38	5	20-ϕ36
700	900	3570	2200	4270	600	910	840	794	40	5	24-ϕ6
800	1000	–	–	–	–	1025	950	901	42	5	24-ϕ39

Note: To choose the actuator according to different torque of valve and medium, the related dimension should be changed accordingly.

Dimensions

(PN25MPa)

Nominal Diameter (mm)	Overall Dimension					Connection Dimension					
	L	H	H1	H2	ϕd0	D	D1	D2	C	f	n-ϕd
50	250	790	420	840	180	165	125	99	20	3	4-ϕ18
80	280	910	460	990	200	200	160	132	24	3	8-ϕ18
100	300	1050	560	1150	250	235	190	156	24	3	8-ϕ22
150	350	1240	660	1390	320	300	250	211	28	3	8-ϕ26
200	400	1520	810	1720	400	360	310	274	30	3	12-ϕ26
250	450	1700	930	1950	400	425	370	330	32	3	12-ϕ30
300	500	1930	1090	2230	450	485	430	389	34	4	12-ϕ30
350	550	2160	1230	2510	450	555	490	448	38	4	16-ϕ33
400	600	2330	1360	2730	500	620	550	503	40	4	16-ϕ36
450	650	2540	1510	2990	500	670	640	548	42	4	20-ϕ36
500	700	2750	1660	3250	550	730	660	609	44	4	20-ϕ36
600	800	3080	1910	3680	550	845	770	720	46	4	20-ϕ39
700	900	3570	2200	4270	600	960	875	820	50	5	24-ϕ42
800	1000	–	–	–	–	1085	990	928	54	5	24-ϕ48

Dimensions

(PN40MPa)

Nominal Diameter (mm)	Overall Dimension					Connection Dimension						
	L	H	H1	H2	ϕd0	D	D1	D2	C	D3×X	f	n-ϕd
50	250	790	420	840	180	165	125	99	20	88×4	3	4-ϕ18
80	310	910	460	990	200	200	160	132	24	121×4	3	8-ϕ18
100	350	1050	560	1150	250	235	190	156	24	150×4.5	3	8-ϕ22
150	450	1240	660	1390	320	300	250	211	28	204×4.5	3	8-ϕ26
200	550	1520	810	1720	400	375	320	284	34	260×4.5	3	12-ϕ30
250	650	1700	930	1950	400	450	385	315	38	313×4.5	3	12-ϕ33
300	750	1930	1090	2230	450	515	450	409	42	364×4.5	4	16-ϕ33
350	850	2160	1230	2510	450	580	510	465	46	422×5	4	16-ϕ36
400	950	2330	1360	2730	500	660	585	535	50	474×5	4	16-ϕ39
450	1050	2540	1510	2990	500	685	610	560	50	524×5	4	20-ϕ39
500	1150	2750	1660	3250	550	755	770	615	52	576×5	4	20-ϕ42
600	1350	3080	1910	3680	550	890	795	735	60	676×5	4	20-ϕ48

Note: To choose the actuator according to different torque of valve and medium, the related dimension should be changed accordingly.

Dimensions

Class150

Nominal Diameter		Overall Dimension					Connection Dimension					
DN	in	L	H	H1	H2	ϕd0	D	D1	D2	C	f	n-ϕd
50	2	178	790	420	840	180	152	120.5	92	16	2	4-ϕ19
80	3	203	910	460	990	200	190	152.5	127	19	2	4-ϕ19
100	4	229	1050	560	1150	250	229	190.5	157	24	2	8-ϕ19
150	6	267	1240	770	1390	320	279	241.5	218	26	2	8-ϕ22
200	8	292	1520	810	1720	400	343	298.5	270	29	2	8-ϕ22
250	10	330	1700	930	1950	400	406	362	324	31	2	12-ϕ25
300	12	256	1930	1090	2230	450	483	432	381	32	2	12-ϕ25
350	14	381	2160	1230	2510	450	533	476	413	35	2	12-ϕ29
400	16	406	2330	1360	2730	500	597	540	470	37	2	16-ϕ29
450	18	432	2540	1510	2990	500	635	578	533	40	2	16-ϕ32
500	20	457	2750	1660	3250	550	699	635	584	43	2	20-φ32
600	24	508	3080	1910	3680	550	813	749.5	692	48	2	20-ϕ35
700	28	610	3570	2200	4270	600	947	863.6	800	45	2	28-ϕ35
800	32	660					1060	978	914	46	2	28-ϕ41

Dimensions

Class300

Nominal Diameter		Overall Dimension					Connection Dimension					
DN	in	L	H	H1	H2	ϕd0	D	D1	D2	C	f	n-ϕd
50	2	216	790	420	840	180	165	127	92	23	2	8-ϕ19
80	3	283	910	460	990	200	210	168.5	127	29	2	8-ϕ22
100	4	305	1050	560	1150	250	254	200	157	32	2	8-ϕ22
150	6	403	1240	660	1390	320	318	270	216	37	2	12-ϕ22
200	8	419	1520	810	1720	400	381	330	270	42	2	12-ϕ25
250	10	457	1700	930	1950	400	445	387.5	324	48	2	16-ϕ29
300	12	502	1930	1090	2230	450	521	451	381	51	2	16-ϕ32
350	14	762	2160	1230	2510	450	584	514.5	413	54	2	20-ϕ32
400	16	838	2330	1360	2730	500	648	571.5	470	58	2	20-ϕ35
450	18	914	2540	1510	2990	500	711	628.5	533	61	2	24-ϕ35
500	20	991	2750	1660	3250	550	775	686	584	64	2	24-ϕ35
600	24	1143	3080	1910	3680	550	914	813	692	70	2	24-ϕ41
700	28						1035	940	800	89	2	28-ϕ45
800	32						1149	1054	914	103	2	28-ϕ51

Note: To choose the actuator according to different torque of valve and medium, the related dimension should be changed accordingly.

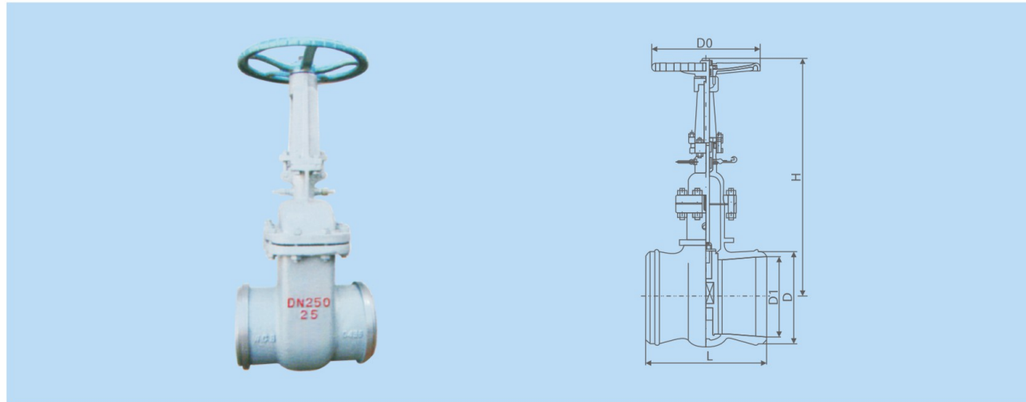

Dimensions

(PN1.6/2.5MPa)

DN(mm)	L	H	D0	PN1.6(MPa)			PN2.5(MPa)		
				D	D1	WT(kg)	D1	H	WT(kg)
50	250	334	250	58	50	19	64	49	23
65	270	439	250	75	65	32	82	67	35
80	280	495	300	91	79	34	95	77	37
100	300	575	350	110	97	44	117	101	49
125	325	587	350	136	121	75	144	126	78
150	350	607	350	163	146	82	172	158	105
200	400	740	400	223	202	158	223	202	160
250	450	863	400	278	254	184	278	254	188
300	500	990	400	330	305	245	330	305	249
350	550	1137	500	382	352	492	382	352	497
400	600	1523	500	432	399	588	432	399	592
450	650	1618	600	485	451	683	485	451	688
500	700	1657	600	535	501	846	535	499	853
600	800	1746	700	636	601	1013	636	599	1020

Note: PN1.6(16) Valve can be used for PN1.0(10) option.

Dimensions

(PN4.0~10.0MPa)

DN(mm)	L	D	PN4.0(MPa)				PN6.4(MPa)				PN10.0(MPa)			
			D1	H	D0	WT (kg)	D1	H	D0	WT (kg)	D1	H	D0	WT (kg)
50	250	64	49	345	300	30	50	350	300	34	49	350	300	37
65	270	83	67	411	300	38	66	447	300	41	64	447	300	44
80	280	96	79	495	350	42	77	499	350	45	75	499	350	47
100	300	117	101	575	350	52	99	582	400	55	97	582	400	57
125	325	144	126	587	400	80	129	590	400	83	125	590	400	87
150	350	172	152	607	400	107	150	611	450	110	145	611	450	113
200	400	223	200	740	450	164	198	745	550	169	190	747	550	172
250	450	278	252	863	550	191	246	867	650	195	236	869	650	198
300	500	330	302	1008	650	254	294	1008	750	260	282	1013	750	265
350	550	382	350	1142	750	499	342	1148	800	504	334	1148	850	508
400	650	432	397	1527	850	598	387	1531	900	604	377	1533	950	610

Application

Flat gate valve used for Natural gas, petroleum, chemical industry, environmental protection, city pipelines, gas pipelines, transmission pipelines, gas storage systems and blowdown system,working as an opening and closing devices . It's widely used on long distance pipeline for natural gas extraction and purification.

Features

1. The valve seat sealing structure should be elastic and have pre tightening force, with the upstream and downstream seat work at the same time . It's face to face seal between seat and sealing;
2. The valve seat has self-cleaning function, and free from erosion of the airflow in the process during the valve opening and closing ;The valve seat shall be made of lubricating and non-abrasive material ;
3. The failure of valve actuator will not affect other parts of the valve, the repair and replacement work can be carried out on the actuator, while the valve remain on the pipeline,no necessary to take off the valve.

Standard

Design & Manufacture	Design Standard	Face-to-Face	End Connection	Inspection and Testing	Pressure -Temperature
	JB/T5298	JB/T5298	JB/T79	JB/T5298	GB/T12224

Performance Specification

Pressure Rating		Pressure Test (MPa)				Applicable Temperature(℃)			Service	
		Shell Test	Inlet Sealing	Outlet Sealing	Low -pressure Seal	"G"Type	"D"Type	Normal Type	Sulfur Resistant Type	Basic Type
Nominal Pressure (MPa)	1.6	2.4	1.76	1.76	0.6	−29~250	−46~121	−29~121	Medium Containing H_2O and $CO_2 > 500$ Mg/m^3	Oil, Natural Gas, Water Etc.
	2.5	3.75	2.75	2.75	0.6					
	4.0	6.0	4.4	4.4	0.6					
	6.4	9.6	7.04	7.04	0.6					

Parts and Materials

Parts Name	Material			
Body,Bonnet	WCB	WC6	CF 8	A351-CF8M
Gate	2Cr13+ENP	20CrMoV+STL	304SS+ENP	ANSE 316+ENP
Stem	2Cr13	2Cr13	304SS	A182-F316S
Seat	A105+PTFE	20CrMoV+STL	304SS/PTFE	316SS/PTFE
Packing	NBR/FPM	Flexible Graphite		PTFE
Gasket	18-8 Braided Flexible Graphite			
Bolt	35	35CrMo	A193-B7M	A193-B8

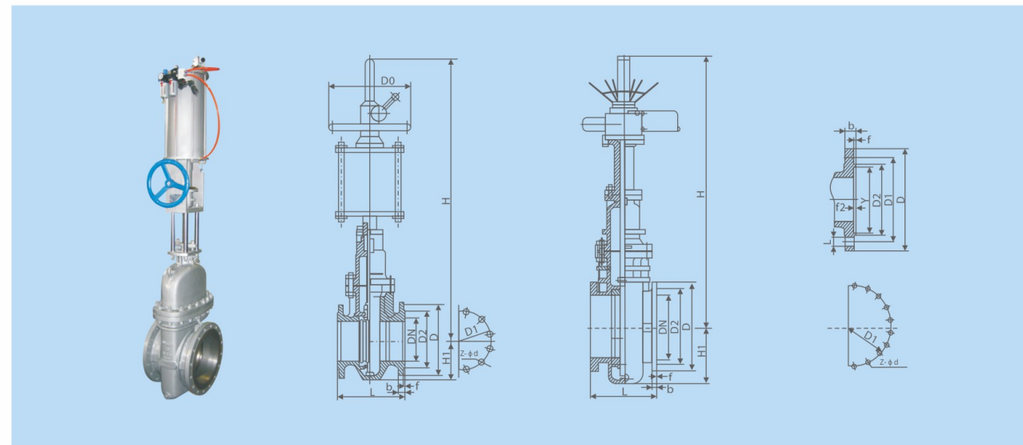

Dimensions

(PN1.6/2.5MPa)

Nominal Pressure	DN(mm)	L	D	D1	D2	D0	f	b	H	H1	Z-ϕd
G7721/G7722											
1.6MPa	50	178	160	125	100	250	3	16	584	80	4-18
	65	190	180	145	120	250	3	18	634	95	4-18
	80	203	195	160	135	250	3	20	688	100	8-18
	100	229	215	180	155	300	3	20	863	114	8-18
	125	254	245	210	185	350	3	22	940	132	8-18
	150	267	280	240	210	350	3	24	1030	150	8-23
	200	292	335	295	265	350	3	26	1277	168	12-23
	250	330	405	355	320	400	3	30	1491	203	12-25
	300	356	460	410	375	450	4	30	1701	237	12-25
	350	381	520	470	435	500	4	34	1875	265	16-25
	400	406	580	525	485	305	4	36	2180	300	16-30
	450	432	640	585	545	305	4	40	2440	325	20-30
	500	457	705	650	608	305	4	44	2860	360	20-34
	600	508	840	770	718	305	5	48	3450	425	20-41
	700	610	910	840	788	305	5	50	3960	460	24-41
	800	660	1020	950	898	305	5	52	4550	512	24-41
	900	711	1120	1050	998	250	5	54	5250	565	28-41
	1000	811	1255	1170	1110	250	5	56	5870	630	28-48
2.5MPa	50	178	160	125	100	250	3	20	584	80	4-18
	65	190	180	145	120	300	3	22	634	95	8-18
	80	203	195	160	135	350	3	22	688	100	8-18
	100	229	230	190	160	350	3	24	863	114	8-23
	125	254	270	220	188	350	3	28	940	132	8-25
	150	267	300	250	218	400	3	30	1030	150	8-25
	200	292	360	310	278	450	3	34	1277	168	12-25
	250	330	425	370	332	500	3	36	1491	203	12-30
	300	356	485	430	390	305	4	40	1701	237	16-30
	350	381	550	490	448	305	4	44	1875	265	16-34
	400	406	610	550	505	305	4	48	2180	300	16-34
	450	432	660	600	555	305	4	50	2440	325	20-34
	500	457	730	660	610	305	4	52	2860	360	20-41
	600	508	840	770	718	305	5	56	3450	425	20-41
	700	610	955	875	815	305	5	60	3960	460	24-48
	800	660	1070	990	930	305	5	64	4550	512	24-48
	900	711	1180	1090	1025	–	5	66	5250	595	28-54
	1000	811	1305	1210	1140	–	5	68	5870	660	28-58

Dimensions

(PN4.0/6.4/10.0MPa)

Nominal Pressure	DN (mm)	L	D	D_1	D_2	Y	D_0	f	f_2	b	H	H_1	Z-φd
G7724/G7725/G7726-****													
4.0MPa	50	250	160	125	100	88	250	3	4	20	584	80	4-18
	65	280	180	145	120	110	250	3	4	22	634	95	8-18
	80	310	195	160	135	121	250	3	4	22	679	102	8-18
	100	350	230	190	160	150	300	3	4.5	24	863	115	8-23
	125	400	270	220	188	176	350	3	4.5	28	940	133	8-25
	150	450	300	250	218	204	350	3	4.5	30	1040	152	8-25
	200	550	375	320	282	260	350	3	4.5	38	1282	188	12-30
	250	650	445	385	345	313	400	3	4.5	42	1495	223	12-34
	300	750	510	450	408	364	450	4	4.5	46	1701	250	16-34
	350	850	570	510	465	422	500	4	5	52	1880	280	16-41
	400	950	655	585	535	474	305	4	5	58	2200	310	20-41
	450	1050	680	610	560	524	305	4	5	60	2480	335	20-41
	500	1150	755	670	612	576	305	4	5	62	2890	380	20-48
	600	1350	890	795	730	678	305	5	6	62	3460	450	20-54
	700	1450	995	900	835	786	305	5	6	68	3985	500	24-54
	800	1650	1135	1030	960	876	305	5	6	76	4750	570	24-58
6.4MPa	50	250	175	135	105	88	250	3	4	26	584	90	4-23
	65	280	200	160	130	110	250	3	4	28	634	105	8-23
	80	310	210	170	140	121	250	3	4	30	679	110	8-23
	100	350	250	200	168	150	300	3	4.5	32	763	130	8-25
	125	400	295	240	202	176	350	3	4.5	36	970	150	8-30
	150	450	340	280	240	204	350	3	4.5	38	1038	175	8-34
	200	550	405	345	300	260	350	3	4.5	44	1282	210	12-34
	250	650	470	400	352	313	400	3	4.5	48	1495	240	12-41
	300	750	530	460	412	364	450	4	4.5	54	1965	270	16-41
	350	850	595	525	475	422	500	4	5	60	2185	300	16-41
	400	950	670	585	525	474	305	4	5	66	2573	335	16-48
	450	1050	715	630	570	524	305	4	5	68	2800	360	20-48
	500	1150	800	705	640	576	305	4	5	70	3280	405	20-54
	600	1350	930	820	750	678	305	5	6	76	3800	470	20-58
10.0MPa	50	250	195	145	112	88	250	3	4	28	590	100	4-25
	65	280	220	170	138	110	250	3	4	32	640	115	8-25
	80	310	230	180	148	121	250	3	4	34	680	120	8-25
	100	350	265	210	172	150	300	3	4.5	38	870	135	8-30
	125	400	310	250	210	176	350	3	4.5	42	980	155	8-34
	150	450	350	290	250	204	350	3	4.5	46	1100	180	12-34
	200	550	430	360	312	260	350	3	4.5	54	1315	220	12-41
	250	650	500	430	382	313	400	3	4.5	60	1605	255	12-41
	300	750	585	500	442	364	450	4	4.5	70	1925	295	16-48
	350	850	665	560	498	422	500	4	5	76	2280	335	16-54
	400	950	715	620	558	474	305	4	5	80	2580	360	16-54

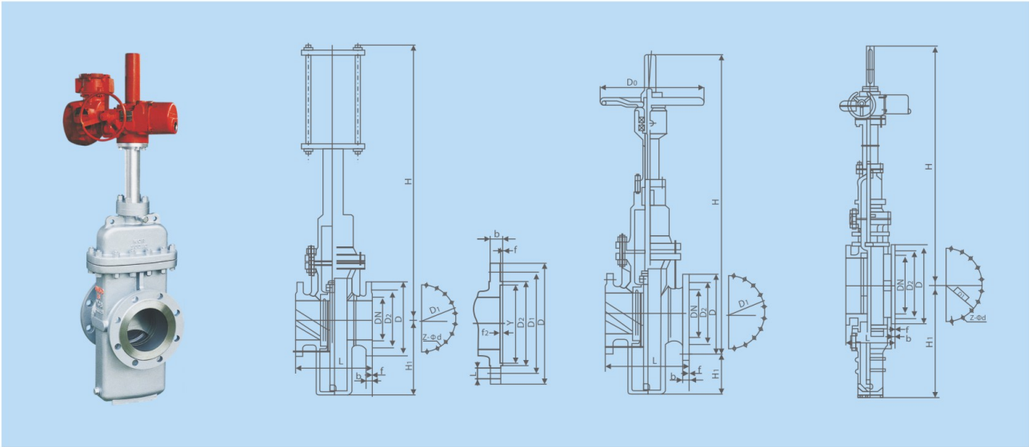

Dimensions

(PN1.6/2.5MPa)

Nominal Pressure	DN (mm)	L	D	D_1	D_2	D_0	f	b	H	H_1	Z-ϕd
G77P21/G77P22											
1.6MPa	50	178	160	125	100	250	3	16	584	80	4-18
	65	190	180	145	120	250	3	18	634	95	4-18
	80	203	195	160	135	250	3	20	688	100	8-18
	100	229	215	180	155	300	3	20	863	114	8-18
	125	254	245	210	185	350	3	22	940	132	8-18
	150	267	280	240	210	350	3	24	1030	150	8-23
	200	292	335	295	265	350	3	26	1277	168	12-23
	250	330	405	355	320	400	3	30	1491	203	12-25
	300	356	460	410	375	450	4	30	1701	237	12-25
	350	381	520	470	435	500	4	34	1875	265	16-25
	400	406	580	525	485	305	4	36	2180	300	16-30
	450	432	640	585	545	305	4	40	2440	325	20-30
	500	457	705	650	608	305	4	44	2860	360	20-34
	600	508	840	770	718	305	5	48	3450	425	20-41
	700	610	910	840	788	305	5	50	3960	460	24-41
	800	660	1020	950	898	305	5	52	4550	512	24-41
	900	711	1120	1050	998	250	5	54	5250	565	28-41
	1000	811	1255	1170	1110	250	5	56	5870	630	28-48
2.5MPa	50	178	160	125	100	250	3	20	584	80	4-18
	65	190	180	145	120	300	3	22	634	95	8-18
	80	203	195	160	135	350	3	22	688	100	8-18
	100	229	230	190	160	350	3	24	863	114	8-23
	125	254	270	220	188	350	3	28	940	132	8-25
	150	267	300	250	218	400	3	30	1030	150	8-25
	200	292	360	310	278	450	3	34	1277	168	12-25
	250	330	425	370	332	500	3	36	1491	203	12-30
	300	356	485	430	390	305	4	40	1701	237	16-30
	350	381	550	490	448	305	4	44	1875	265	16-34
	400	406	610	550	505	305	4	48	2180	300	16-34
	450	432	660	600	555	305	4	50	2440	325	20-34
	500	457	730	660	610	305	4	52	2860	360	20-41
	600	508	840	770	718	305	5	56	3450	425	20-41
	700	610	955	875	815	305	5	60	3960	460	24-48
	800	660	1070	990	930	305	5	64	4550	512	24-48
	900	711	1180	1090	1025	-	5	66	5250	595	28-54
	1000	811	1305	1210	1140	-	5	68	5870	660	28-58

Dimensions

(PN4.0/6.4/10.0MPa)

Nominal Pressure	DN (mm)	L	D	D_1	D_2	Y	D_0	f	f_2	b	H	H_1	Z-Φd
G77P24、G77P25、G77P26													
4.0MPa	50	250	160	125	100	88	250	3	4	20	584	80	4-18
	65	280	180	145	120	110	250	3	4	22	634	95	8-18
	80	310	195	160	135	121	250	3	4	22	679	102	8-18
	100	350	230	190	160	150	300	3	4.5	24	863	115	8-23
	125	400	270	220	188	176	350	3	4.5	28	940	133	8-25
	150	450	300	250	218	204	350	3	4.5	30	1040	152	8-25
	200	550	375	320	282	260	350	3	4.5	38	1282	188	12-30
	250	650	445	385	345	313	400	3	4.5	42	1495	223	12-34
	300	750	510	450	408	364	450	4	4.5	46	1701	250	16-34
	350	850	570	510	465	422	500	4	5	52	1880	280	16-41
	400	950	655	585	535	474	305	4	5	58	2200	310	20-41
	450	1050	680	610	560	524	305	4	5	60	2480	335	20-41
	500	1150	755	670	612	576	305	4	5	62	2890	380	20-48
	600	1350	890	795	730	678	305	5	6	62	3460	450	20-54
	700	1450	995	900	835	786	305	5	6	68	3985	500	24-54
	800	1650	1135	1030	960	876	305	5	6	76	4750	570	24-58
6.4MPa	50	250	175	135	105	88	250	3	4	26	584	90	4-23
	65	280	200	160	130	110	250	3	4	28	634	105	8-23
	80	310	210	170	140	121	250	3	4	30	679	110	8-23
	100	350	250	200	168	150	300	3	4.5	32	763	130	8-25
	125	400	295	240	202	176	350	3	4.5	36	970	150	8-30
	150	450	340	280	240	204	350	3	4.5	38	1038	175	8-34
	200	550	405	345	300	260	350	3	4.5	44	1282	210	12-34
	250	650	470	400	352	313	400	3	4.5	48	1495	240	12-41
	300	750	530	460	412	364	450	4	4.5	54	1965	270	16-41
	350	850	595	525	475	422	500	4	5	60	2185	300	16-41
	400	950	670	585	525	474	305	4	5	66	2573	335	16-48
	450	1050	715	630	570	524	305	4	5	68	2800	360	20-48
	500	1150	800	705	640	576	305	4	5	70	3280	405	20-54
	600	1350	930	820	750	678	305	5	6	76	3800	470	20-58
10.0MPa	50	250	195	145	112	88	250	3	4	28	590	100	4-25
	65	280	220	170	138	110	250	3	4	32	640	115	8-25
	80	310	230	180	148	121	250	3	4	34	680	120	8-25
	100	350	265	210	172	150	300	3	4.5	38	870	135	8-30
	125	400	310	250	210	176	350	3	4.5	42	980	155	8-34
	150	450	350	290	250	204	350	3	4.5	46	1100	180	12-34
	200	550	430	360	312	260	350	3	4.5	54	1315	220	12-41
	250	650	500	430	382	313	400	3	4.5	60	1605	255	12-41
	300	750	585	500	442	364	450	4	4.5	70	1925	295	16-48
	350	850	665	560	498	422	500	4	5	76	2280	335	16-54
	400	950	715	620	558	474	305	4	5	80	2580	360	16-54

Application

Auto compensation balanced double parallel gate valve is a Product with new structure which has smaller open-and-close torque, high speed, little vibration, long performance life and reliable operation. It is mainly applied to cut-off or discharge of gas and liquid delivery pipelines.

Features

1. Using two parallel disc and wedige-tightening device for the valve sealing structure instead of the tradional wedge valve structure.
2. The valve sealing are assembly by speperated parts,which assure tight sealing temperature and the valve jam of thermal expansion.
3. Abrasion-resistant and anti-corrosive materials are using on the sealing surface,whuch prolong the valve service life.
4. For application under high temperature and high pressure,the valve gate sealing structure are designed as upstream pressure type.which insure the pressure rising caused by temperature change in the valve cavity can be released to upstream,and ensure the safety used.
5. Fully enclosed structure designed, which has good protection function and can be used in all kind weather.

Standard

Design & Manufacture	Design Standard	Face-to-Face	End Connection	Inspection and Testing	Pressure -Temperature
	JB/T5298 GB/T19672	JB/T5298, GB/T19672 GB/T12221	JB/T79 GB/T9113	JB/T9092 GB/T13927	GB/T9131

Technical Data

Model	G74**-****-**			
Pressure Rating	PN1.6~10.0MPa			Class150~600
Nominal Diameter	DN50~1000mm			2"~40"
Actuators	Manuel			Gear, Pneumatic, Hydraulic, Motor Drive
Applicable Scope	Class150 ~ 300 (PN1.6 ~ 4.0)	Class400 (PN6.4)	Class600 (PN10.0)	4"~36" (DN100~900mm)
	2" ~ 6" (DN50 ~ 150mm)	2" ~4" (DN50 ~ 100mm)	2"~3" (DN50 ~ 80mm)	

Performance Specification

Pressure Rating		Pressure Test (MPa)				Applicable Temperature (℃)	Applicable Medium	
		Shell Test	Inlet Sealing	Outlet Sealing	Low -pressure Seal		Normal Type	Sulfur Resistant Type
Nominal Pressure (MPa)	1.6	2.4	1.76	1.76	0.6	−29~121℃ or According to User's Requirement	Oil, Natural Gas, Water and Other Non Corrosive Medium	H_2S, CO_2 Oil, Natural Gas, Water and Other Corrosive Media
	2.5	3.75	2.75	2.75	0.6			
	4.0	6.0	4.4	4.4	0.6			
	6.4	9.6	7.04	7.04	0.6			
	10.0	15.0	11.0	11.0	0.6			
Class (Lb)	150	3.0	2.2	2.2	0.6			
	300	7.5	5.5	5.5	0.6			
	600	15.0	11.0	11.0	0.6			

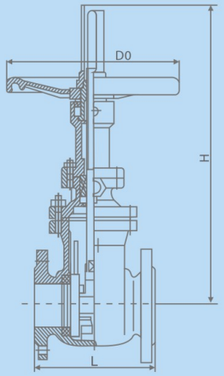

Dimensions

(PN1.6~6.4MPa)

Nominal Pressure	DN (mm)	50	65	80	110	125	150	200	250	300	350	400	450	500	600
G7422、G7423、G7424															
1.6MPa	L	250	270	280	300	325	350	400	450	500	550	600	650	700	800
	H	417	452	530	607	614	850	1060	1225	1415	1630	1780	2050	2181	2599
	D0	240	240	280	300	300	350	400	450	500	500	600	720	720	720
	WT(kg)	22	30	44	47	76	96	160	228	300	388	566	900	958	1410
2.5MPa	L	250	270	280	300	325	350	400	450	500	550	600	650	700	800
	H	417	452	567	590	756	880	1041	1260	1415	1630	1780	2050	2181	2599
	D0	240	240	280	320	320	400	400	450	500	500	600	720	720	720
	WT(kg)	23	32	46	67	78	112	218	290	324	423	566	900	958	1410
4.0MPa	L	250	280	310	350	400	450	550	650	750	850	950	1050	1150	1350
	H	417	452	567	590	776	885	1065	1250	1531	1700	1770	1820	1880	2200
	D0	240	270	280	320	350	400	500	550	640	640	640	680	680	680
	WT(kg)	28	35	47	68	115	150	235	374	550	890	1235	1400	1506	1780
6.4MPa	L	250	280	310	350	400	450	550	650	750	850	950	–	–	–
	H	505	545	605	665	780	980	1120	1332	1680	1745	1820	–	–	–
	D0	280	280	320	400	400	450	550	550	640	640	680	–	–	–
	WT(kg)	44	64	84	119	174	266	388	500	550	898	1234	–	–	–

Application

ANSI Standard cast steel gate valve is a control parts on the fluid transmission system, with the function of cut-off, regulation, diversion, to prevent contra-flow, balance the pressure or overflow relief pressure; from the simplest ANSI gate valve on fluid control system to various valves used in complex automatic control system , it's various in specifications. Gate valves can be used to control air, water, steam, corrosive medium, mud, oil, liquid metals ,radioactive media and other types of fluid flow.

Features

1. Product design and manufacturing in line with the world's advanced standards with good sealing and excellent performance;
2. Reasonable structure designed,attractive appearnce;
3. Using flexible wedge gate structure, there is bearing design for large size valve, easy to open and close;
4. Various body material, packing and gasket are designed and selected according to the actual conditions or user's requirements, which can be applied on all kinds of pressure, temperature and medium conditions.

Standard

Design & Manufacture	Face-to-Face	End Connection	Butt Welding Dimension	Pressure -Temperature	Inspection and Testing
API 6D, 600	ANSI B16.10	ANSI B16.5	ANSI B16.25	ANSI B16.34	API 598, API 6D

Performance Specification

Nominal Pressure(Lb)	Shell test		Water seal test		Gas seal test	
	MPa	Lbf/in²	MPa	Lbf/in²	MPa	Lbf/in²
150	3.1	450	2.2	315	0.5~0.7	60~100
300	7.8	1125	5.6	815		
600	15.3	2225	11.2	1630		
900	23.1	3350	16.8	2440		
1500	38.4	5575	28.1	4080		
2500	64.0	9367	46.8	6873		

Parts and Materials

Body, Bonnet, Gate	Stem	Sealing Face	Gasket (Ring)	Packing	Working temperature(℃)	Applicable Medium
WCB	2Cr13	13Cr STL Body material PTFE Nylon	Reinforced flexible graphite 13Cr/ Flexible graphite SFB-2 08 Titanium steel F304 F316 F304L F316L	Flexible graphite Reinforced flexible graphite SFB/260 SFP/260 PTFE	≤425	Water, Steam, Oil,
WC1	38CrMoAl 25Cr2MoV				≤450	
WC6					≤540	
WC9					≤570	
C5 C12					≤540	
CF8	F304				≤600	Nitric Acid, Acetic Acid, Urea
CF3	F316					
CF8M	F304L					
CF3M	F316L					

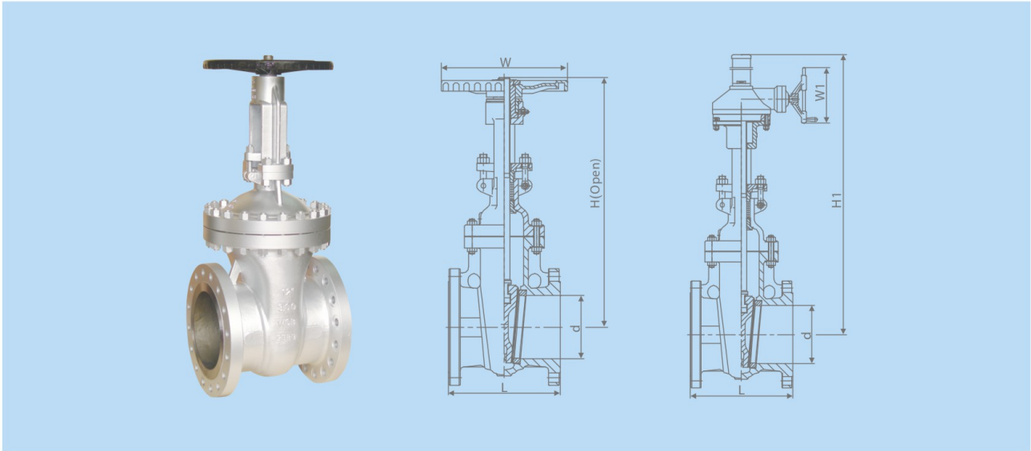

Dimensions

(Class 150)

Class	NPS (in)	DN (mm)	L			d	H	H1	W	W1	WT (kg)	
			RF	RTJ	BW						Hand-wheel	Transmission device
Class 150	1/2	15	108	119	108	13	195	-	120	-	4	-
	3/4	20	117	130	117	19	210	-	120	-	5	-
	1	25	127	140	127	25	240	-	140	-	7	-
	$1^1/4$	32	140	153	140	32	300	-	180	-	10	-
	$1^1/2$	40	165	178	165	38	395	-	200	-	14	-
	2	50	178	191	216	51	400	-	200	-	19	-
	$2^1/2$	65	191	203	241	64	435	-	200	-	25	-
	3	80	203	216	283	76	515	-	250	-	33	-
	4	100	229	241	305	102	595	-	280	-	49	-
	5	125	254	267	381	127	725	-	280	-	62	-
	6	150	267	279	403	152	780	820	300	310	77	104
	8	200	292	305	419	203	975	1020	350	310	123	150
	10	250	330	343	457	254	1150	1200	400	310	188	215
	12	300	356	368	502	305	1380	1430	450	310	288	315
	14	350	381	394	572	337	1545	1580	500	310	385	435
	16	400	406	419	610	387	1733	1780	500	460	500	552
	18	450	432	445	660	438	1915	1990	500	460	601	653
	20	500	457	470	711	489	2122	2220	600	460	764	816
	24	600	508	521	813	591	2520	2600	600	460	1007	1185
	26	650	559	-	864	633	-	2800	-	600	-	1550
	28	700	610	-	914	684	-	3050	-	600	-	1880
	30	750	610	-	914	735	-	3130	-	600	-	2300
	32	800	711	-	965	779	-	3280	-	600	-	2550
	34	850	762	-	1016	830	-	3500	-	600	-	2950
	36	900	711	-	1016	874	-	3720	-	600	-	3390

Dimensions

(Class 300~600)

Class	NPS (in)	DN (mm)	L			d	H	H1	W	W1	WT (kg)	
			RF	RTJ	BW						Hand-wheel	Transmission device
Class300	1/2	15	140	151	140	13	198	-	120	-	6	-
	3/4	20	152	165	152	19	215	-	140	-	7	-
	1	25	165	178	165	25	245	-	160	-	10	-
	$1^1/4$	32	178	191	178	32	306	-	180	-	15	-
	$1^1/2$	40	190	203	190	38	400	-	200	-	21	-
	2	50	216	232	216	51	420	-	200	-	25	-
	$2^1/2$	65	241	257	241	64	446	-	200	-	30	-
	3	80	283	298	283	76	537	-	250	-	48	-
	4	100	305	321	305	102	619	650	280	310	73	100
	5	125	381	397	381	127	722	750	300	310	99	126
	6	150	403	419	403	152	806	835	350	310	130	186
	8	200	419	435	419	203	1000	1030	400	310	208	235
	10	250	457	473	457	254	1240	1280	450	310	334	386
	12	300	502	518	502	305	1425	1460	500	310	450	502
	14	350	762	778	762	337	1585	1620	600	460	704	756
	16	400	838	854	838	387	1790	1830	500	460	923	965
	18	450	914	930	914	438	1960	2000	650	460	1131	1224
	20	500	991	1010	991	479	2158	2220	750	460	1345	1400
	24	600	1143	1165	1143	589	2576	2620	900	600	2122	2385
	26	650	1245	1270	1245	635	-	2850	-	600	-	3000
	28	700	1346	1372	1346	686	-	3080	-	600	-	3300
	30	750	1397	1422	1397	737	-	3180	-	600	-	3550
	32	800	1524	1553	1524	779	-	3300	-	600	-	4400
	34	850	1626	1654	1626	830	-	3550	-	600	-	5200
	36	900	1727	1756	1727	874	-	3760	-	600	-	6050
Class600	2	50	292	295	292	51	444	-	200	-	32	-
	$2^1/2$	65	330	333	330	64	500	-	250	-	52	-
	3	80	356	359	356	76	558	585	280	310	60	87
	4	100	432	435	432	102	665	695	300	310	107	134
	5	125	508	511	508	127	760	790	350	310	175	227
	6	150	559	562	559	152	868	900	450	310	216	268
	8	200	660	664	660	200	1073	1110	500	310	399	451
	10	250	787	791	787	248	1263	1300	650	460	605	657
	12	300	838	841	838	298	1600	1650	700	460	851	893
	14	350	889	892	889	327	1705	1750	900	460	1177	1232
	16	400	991	994	991	375	1835	1900	900	460	1513	1568
	18	450	1092	1095	1092	419	-	2020	-	600	-	1980
	20	500	1194	1200	1194	464		2172		600		2460
	24	600	1397	1407	1397	559	-	2650	-	600	-	3650

Dimensions

(Class 900~2500)

Class	NPS (in)	DN (mm)	L			d	H	H1	W	W1	WT(kg)	
			RF	RTJ	BW						Hand-wheel	Transmission device
Class900	2	50	368	371	368	47	500	-	280	-	70	-
	$2^1/2$	65	419	422	419	57	550	-	280	-	110	-
	3	80	381	384	381	73	610	660	300	310	140	167
	4	100	457	460	457	98	702	750	350	310	200	227
	5	125	559	562	559	121	850	900	400	310	258	285
	6	150	610	613	610	146	980	1060	500	460	358	410
	8	200	737	740	737	190	1100	1140	650	460	550	600
	10	250	838	841	838	234	1320	1370	700	460	1000	1100
	12	300	965	968	965	282	1500	1560	900	460	1215	1310
	14	350	1029	1038	1029	311	1900	1950	900	600	1600	1700
	16	400	1130	1140	1130	354	2050	2100	900	600	2150	2330
Class 1500	2	50	368	371	368	47	510	-	280	-	70	-
	$2^1/2$	65	419	422	419	57	560	-	300	-	110	-
	3	80	470	473	470	70	620	670	350	310	175	202
	4	100	546	549	546	92	728	770	400	310	270	300
	5	125	673	676	673	111	870	920	450	310	378	405
	6	150	705	711	705	136	1000	1070	500	460	520	575
	8	200	832	841	832	174	1130	1180	750	460	820	915
	10	250	991	1000	991	222	1360	1410	900	600	1560	1750
	12	300	1130	1146	1130	263	–	1620	–	600	–	2120
	14	350	1257	1276	1257	289	–	2020	–	600	–	2600
	16	400	1384	1407	1384	330	–	2180	–	600	–	3450
Class 2500	2	50	451	454	451	35	530	580	280	310	100	130
	$2^1/2$	65	508	514	508	47	580	630	300	310	150	180
	3	80	578	584	578	57	650	700	350	310	245	275
	4	100	673	683	673	73	750	800	400	310	390	420
	5	125	794	807	794	92	900	960	500	460	550	580
	6	150	914	927	914	111	1040	1100	600	460	780	835
	8	200	1022	1038	1022	146	1150	1200	750	460	1260	1355
	10	250	1270	1292	1270	184	1400	1460	900	600	2380	2565
	12	300	1422	1445	1422	219	–	1660	–	600	–	3250

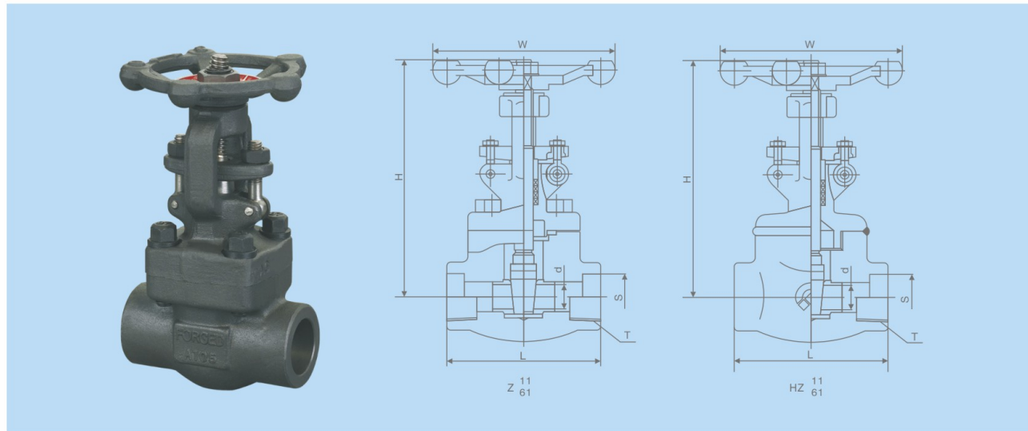

Application Specification

1、Design&manufacture ：ASME/ANSI B16.34；API 602；JB/T7746

2、Connection dimension：

(1)Socket welded end：ASME/ANSI B16.11；JB/T1751

(2)Screwed end：ASME/ANSI B1.20.1(NPT)；GB/T7306-87(RC)

3、Structure feature：B.B Or W.B；OS&Y

4、Material of major parts： A105; LF2; F5; F11; F22; F304;F316;F304L;F316L

5、Inspection and testing：API 598；GB/T13927；JB/T9092

Dimensions and Weight

(PN1.6~14.0MPa;Class150~800)

DN(mm)	R.P	8	10	15	20	25	32	40	50	–
NPS(in)		1/4	3/8	1/2	3/4	1	$1^1/4$	$1^1/2$	2	–
DN(mm)	F.P	–	8	10	15	20	25	32	40	50
NPS(in)		–	1/4	3/8	1/2	3/4	1	$1^1/4$	$1^1/2$	2
d	R.P	7	10	10	13	18	24	29	36.5	–
	F.P	–	7	10	13	18	24	29	36.5	46.5
L	R.P	79	79	79	92	111	120	120	140	–
	F.P	–	79	79	92	111	120	120	140	178
H(Open)	R.P	149	151	151	158	185	239	243	279	–
	F.P	–	149	151	158	158	239	243	279	328
W	R.P	100	100	100	100	125	160	160	180	–
	F.P	–	100	100	100	125	160	160	180	200
WT (kg)	R.P	1.9	1.9	1.9	2.1	3.2	6.9	6.9	10.4	–
	F.P	–	1.9	1.9	2.1	3.2	6.9	6.9	10.4	15.8

Instruction

1,Welded bonnet gate valve(WB), Model G79W；Bolted bonnet"B.B",code"W",for example,G7902-****。

2, Reduced bore code in "R.P"、Full bore Model in"F.P"。

3,The former "F" in Model indicates the full bore, such as F3/4, omited this code for reduced bore。

4,It's allowed for one end SW, another end Screwed, but it should be stated and marked for the special connection。

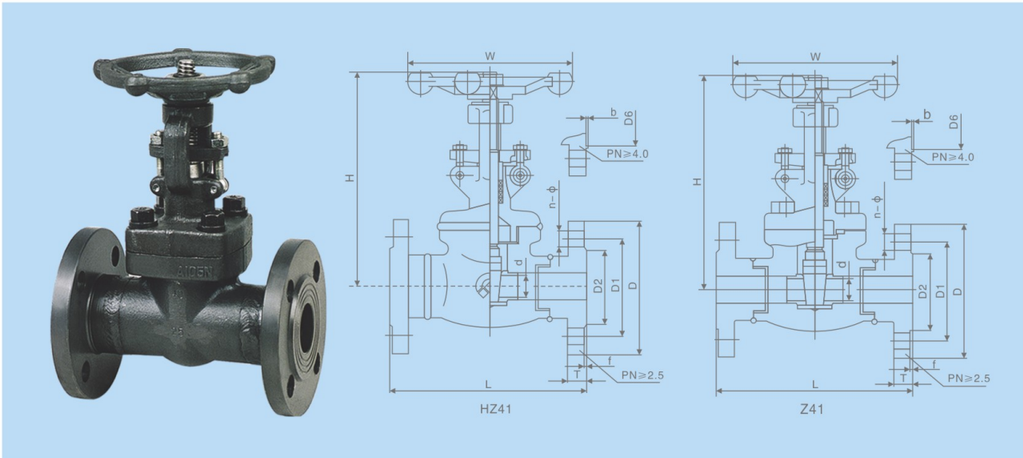

Application Specification

1、Design & manufacture：JB/T7746
2、Connection dimension：JB/T97；GB/T12221
3、End connetion：JB/T82.1~82.4
4、Structure feature：B.B Or W.B；OS&Y-Reducing(R.P)
5、Main body material：A105,LF2,F5,F11,F22,F304；F304L；F316；F316L
6、Inspection and testing：GB/T13927；JB/T9092

Dimensions and Weight

(PN1.6~10.0MPa)

Nominal Pressure (MPa)	DN(mm)	15	20	25	32	40	50	65
1.6	d	10	12.7	19.1	24	31.8	38.1	50.8
2.5								
4.0								
6.4								
10.0								
1.6	L	130	150	160	180	200	250	265
2.5								
4.0								
6.4		170	190	210	230	240	250	280
10.0								
1.6	H	162	162	211	238	257	282	357
2.5								
4.0								
6.4								
10.0								
1.6	W	100	100	125	125	160	180	200
2.5								
4.0								
6.4								
10.0								
1.6	WT (kg)	2.8	3.2	4.9	5.6	9.8	12.8	23.0
2.5		3.0	3.5	5.5	6.8	10.4	14.4	24.5
4.0		3.6	4.9	7.0	9.4	13.3	18.2	26.2
6.4		3.8	5.3	7.9	10.0	13.8	18.6	27.7
10.0		4.2	5.8	8.8	12.1	15.6	19.5	32.0

Note: Nominal pressure PN>6.4Mpa, RJ connection accoding to JB77-59

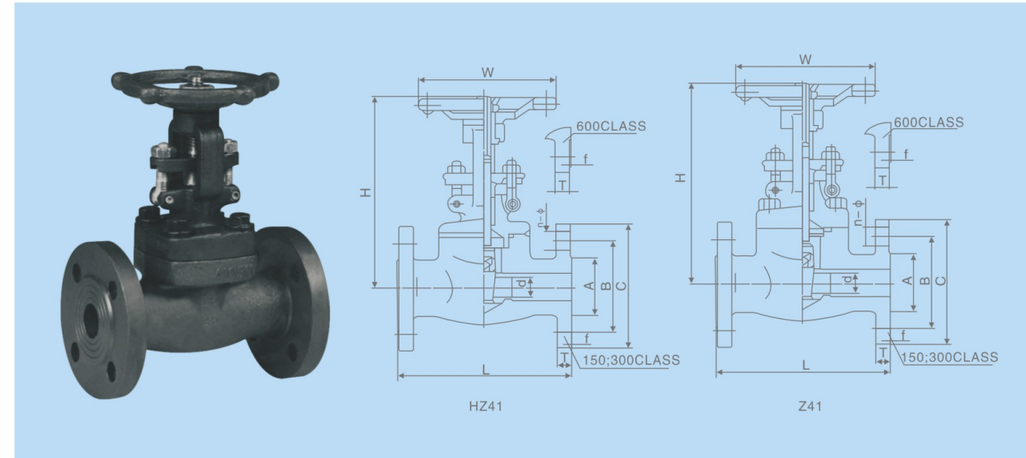

Application Specification

1、Design & manufacture：ASME/ANSI B16.34；API 602
2、Face-to-Face：ANSME/ANSI B16.10
3、End connetion：ASME/ANSI B16.5(RF)
4、Structure feature：B.B or W.B; OS&Y-Reducing(R.P)
5、Main body material：A105; LF2; F5; F11; F22; F304;F316;F304L;F316L
6、Inspection and testing：API 598

Dimensions and Weight

(Class 150~600)

Nominal Pressure (MPa)	NPS(in)	1/2	3/4	1	1 1/4	1 1/2	2	1 1/2
150	d	10	12.7	19.1	24	31.8	31.8	48.5
300								
600								
150	L	108	117	127	140	165	178	190
300		140	152	165	178	190	216	241
600		165	190	216	229	241	292	330
150	H	162	162	211	238	257	282	357
300								
600								
150	W	100	100	125	125	260	180	200
300								
600								
150	WT(kg)	3.0	3.5	5.5	6.8	10.4	14.4	24.5
300		3.6	4.9	7.0	9.4	13.3	18.2	26.2
600		4.2	5.8	8.8	12.1	15.6	19.5	32.0

Note:1. CLASS≤600,RF flange for standard valve, if RJ or LF is required ,then it should be stated specially.

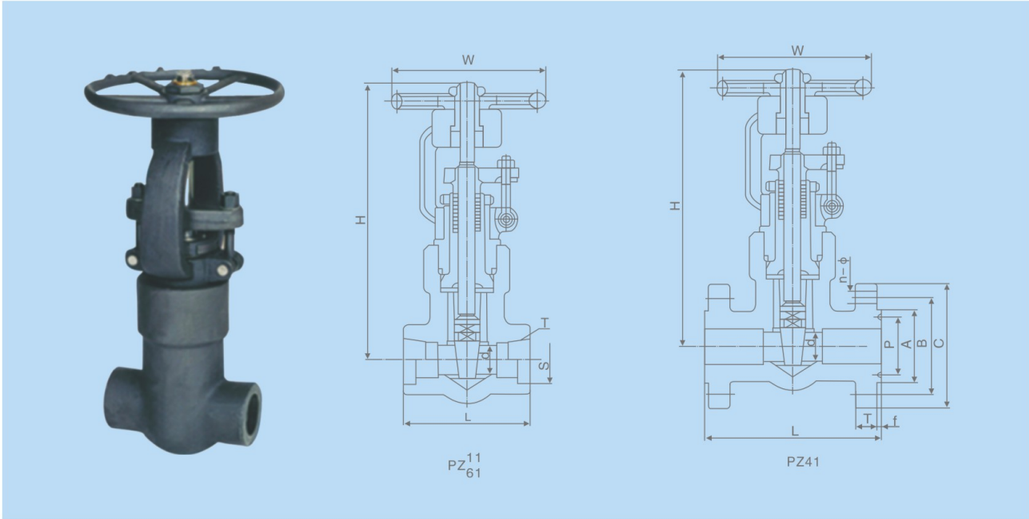

Application Specification

1、Design & manufacture：ASME/ANSI B16.34mAPI 602,JB/T7746
2、Face to face：ASME/AMSI B16.10, GB/T12221
3、End connection：
(1) Flange end：ASME/ANSI B16.5mJB/T82.1~82.4-94
(2) Socket welded end：ASME/ANSI B16.11，JB/T1751
(3) Screwed end：ASME/ANSI B1.201(NPT); GB/T7306-87(RC)
4、Structure feature：P.S,OS&Y-Full bore(F.P)
5、Main body material：A105；LF2,F5,F11mF22,F304,F316；F304L,F316L
6、Inspection and testing：API 598,GB/T13927

Dimensions and Weight

(PN16.0MPa;Class900~1500)

NPS(in)			1/2	3/4	1	1 1/4	1 1/2	2
DN(mm)			15	20	25	32	40	50
d(Full bore)			13	18	24	29	36.5	46.5
L	SW Or NPT(Rc)		140	140	140	178	178	216
	Flange	ANSI	216	229	254	279	305	371.2
		PN1.6	170	190	210	230	260	300
H(Open)			321	321	321	380	414	502
W			125	125	160	160	180	240
WT(kg)	SW		11.5	11.0	10.2	20.5	21.7	43.5
	RJ		17.0	16.7	21.3	24.5	28.7	45.8

Description: pressure seal valve are widely used in high temperature and high pressure service to replace the BB or other clamp connection valve . Generally pressure more than CLASS 900 (PSi) is considered to be high pressure; the temperature more than 425 ℃ is considered to be high temperature.

DN50	S20	01	–	W	O	S	M	LUG
▼ 1	▼ 2	▼ 3		▼ 4	▼ 5	▼ 6	▼ 7	▼ 8

1 Nominal diameter

DN 50 (or 2")

2 Valve model

S20 Outside screw standard knife gate valve
S21 Inside screw knife gate valve
SI20 Slurry knife gate valve
S22 Slide knife gate valve
S23 Square port knife gate valve

3 Valve pressure rating

01 ANSI 150Lb
02 ANSI 300Lb
03 ANSI 600Lb
11 DIN PN10
12 DIN PN16
13 DIN PN25
14 DIN PN40
15 DIN PN64
16 DIN PN100
21 GB PN10 Bar
22 GB PN16 Bar
23 GB PN25 Bar
24 GB PN40 Bar
25 GB PN64 Bar
26 GB PN100 Bar

4 Body material

D Ductile iron
W A216–WCB body
0 CF8 /304SS
1 CF8M/316SS
2 CF3M/316L
5 Other material

5 Gate material

W A216–WCB body
0 CF8 / 304SS
1 CF8M / 316SS
2 CF3M / 316L
5 Other material

6 Stem material

W 45#steel
S 420SS or 2Cr13
H 17–4PH stainless steel
0 304SS
1 316SS
5 Other material

7 Seat material

M Body material hardening treatment
0 304SS
1 316SS
S Stellite hard metal
E EPDM
N NBR
V Viton (FKM)
P PTFE

8 End Connection

WF Wafer
LG Lug type
RF Flanged

S20 Type Product Description

1, S20 TYPE Knife gate valve has a replaceable rubber sealing ring structure, the principle of sealing is mainly based on the close touching between the gate and rubber sealing ring to achieve the sealing performance.
2,The main features of this structure is the sealing ring pressed by a whole forged metal seat (tapered seal groove), so it won't split down during opening, When the seal is broken,it can be easily replaced by remove the metal seat parts.The yoke is made by steel plate in shape of I, which is suitable for electric or pneumatic actuator, to meet the different requirements of services.

S20 Type Sealing Structure

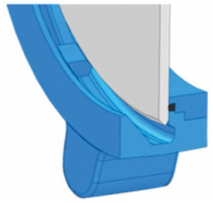

DN50–DN400
One way sealing
(EPDM,NBR,VITON)

1. For resilient sealing structure of DN50~DN 400 Flowtecal S20 series knife gate valve,the valve seat seal ring's cross section are made in cone type,which is fimly clamp in the groove of the seat ring container. When the seal ring was damaged,it can be replaced easliy by disassembly container.A wedge guider is designed on the valve bottom to hold the valve gate firmly on the seal ring to ensure the valve sealing.

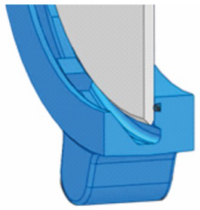

DN450–DN1000
One way sealing
(EPDM,NBR,VITON)

2. For resilient sealing structure of DN450~DN1000 S20 series knife gate valve,the valve seat seal ring's cross section are made in trapezoid type,which is press in a trapezoid groove of the valve seal seat surface. This trapezoid groove can keep the seal ring firmly and avoid the seal ruing fall off form the valve seat.

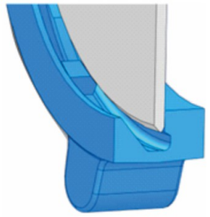

DN50–DN1000
Single sealing (Metal seal,
Hard alloy sealing)

3. This kind of metal seal structure is applied on service of powder, granule, cinder, mud and other medium, powder, granule, cinder, mud and other medium,and the pipeline does not require complete sealing conditions.

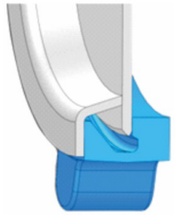

DN50–DN1000
Single sealing (Metal sealing,
Hard alloy sealing)

4. A guide sleeve blocking the medium to contact the valve seat, it's applied on solid medium, to prevent the medium flow into the sealing groove.The guide sleeve can be made of different materials. The guide sleeve length is showed as follows:
DN50–DN250 X=9mm
DN300–DN600 X=12mm

Parts and Materials of S20 Type

No.	Parts Name	Material
1	Body	F55 F53 CF3M CF8M CF8 WCB GGG40
2	Seat	F55 F53 CF3M CF8M CF8 WCB GGG40
3	Sealing Ring	VITON EPDM NBR
4	Gate	F55 F53 SS316L SS304
5	Packing	PTFE+EPDM
6	Packing Gland	CF8M CF8 WCB ZL103
7	Bracket	SS316L SS304 Q235
8	Clamping jaw	WCB
9	Actuator	Aluminum alloy
	Standard parts	Q235+Zinc plated

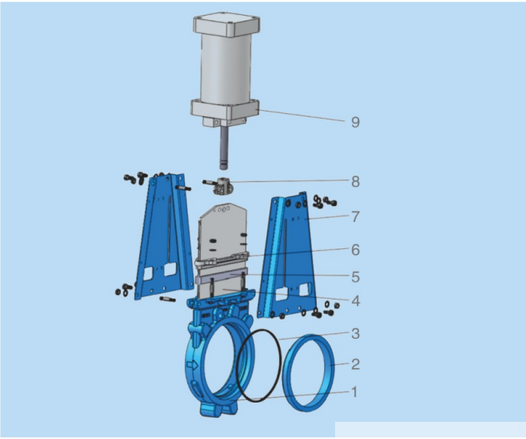

Flowtecal
S20 Series Knife Gate Valve

S20 Type Feature Analysis

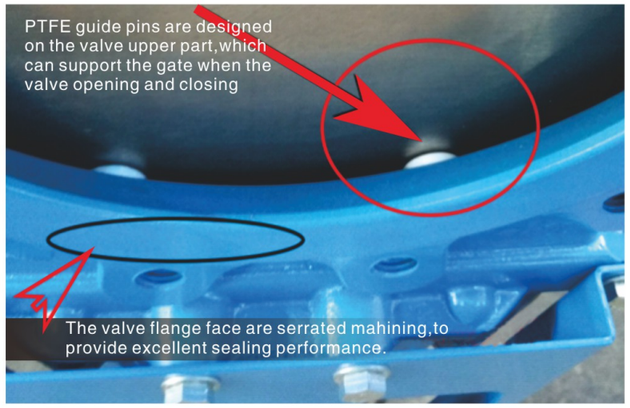

S20 Assembly Arawing

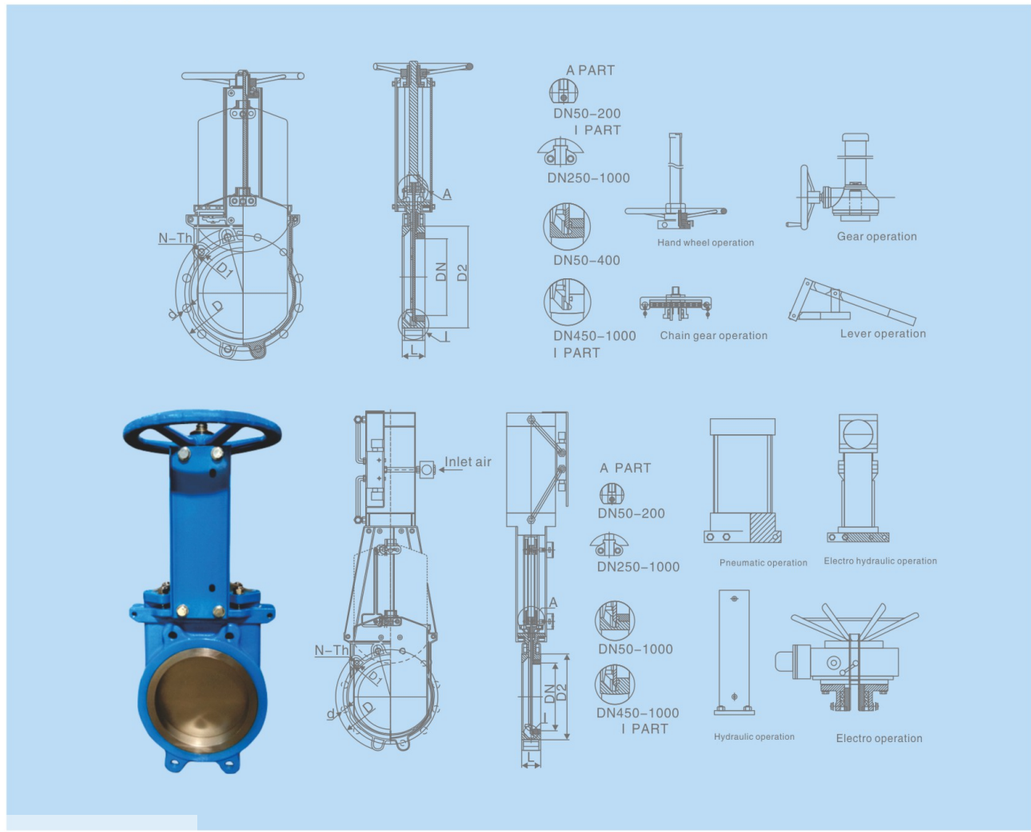

S20 Series Assembly Drawing of Metal Seated Knife Gate Valve

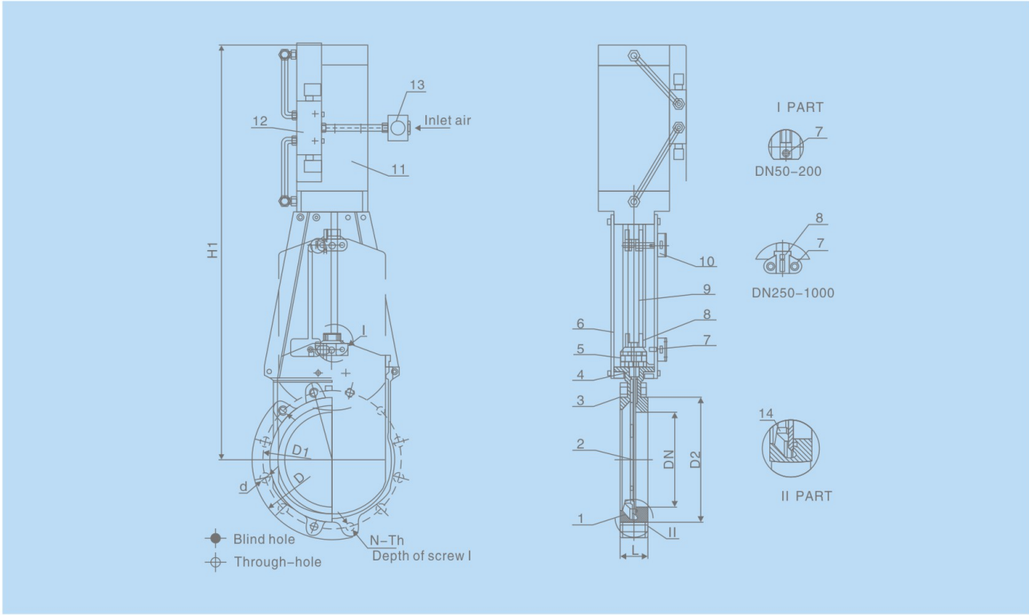

Parts and Materials

No.	Part Name	1	2	3	No.	Part Name	4	5	6
		WCB	GGG40	CF 8			CF8M	CF3M	SS310
1	Body	WCB	GGG40	CF8	1	Body	CF8M	CF3M	SS310
2	Gate	SS304	SS304	SS304	2	Gate	SS316L	SS316L	SS310
3	Guide pad	PTFE	PTFE	PTFE	3	Guide pad	PTFE	PTFE	PTFE
4	Packing	PTFE	PTFE	PTFE	4	Packing	PTFE	PTFE	PTFE
5	Packing gland	WCB	WCB	CF 8	5	Packing gland	CF8M	CF3M	SS310
6	Bracket	Q235	Q235	Q235	6	Bracket	Q235	Q235	Q235
7	Pin	45#	45#	45#	7	Pin	45#	45#	45#
8	Clamping jaw	WCB	WCB	WCB	8	Clamping jaw	WCB	WCB	WCB
9	Piston rod	45#+Zinc plated	45#+Zinc plated	45#+Zinc plated	9	Piston rod	45#+Zinc plated	45#+Zinc plated	45#+Zinc plated
10	Position limit switch	Components	Components	Components	10	Position limit switch	Components	Components	Components
11	Pneumatics Actuator	Components	Components	Components	11	Pneumatics Actuator	Components	Components	Components
12	Solenoid valve	Components	Components	Components	12	Solenoid valve	Components	Components	Components
13	Filter	Components	Components	Components	13	Filter	Components	Components	Components
14	Wedge guider	WCB	GGG40	CF8	14	Wedge guider	WCB	GGG40	CF8
	Bolts&Nuts	Q235+Zinc plated	Q235+Zinc plated	SS304		Bolts&Nuts	SS304	SS304	SS304

S20 Series Assembly Drawing of Soft Seated Knife Gate Valve

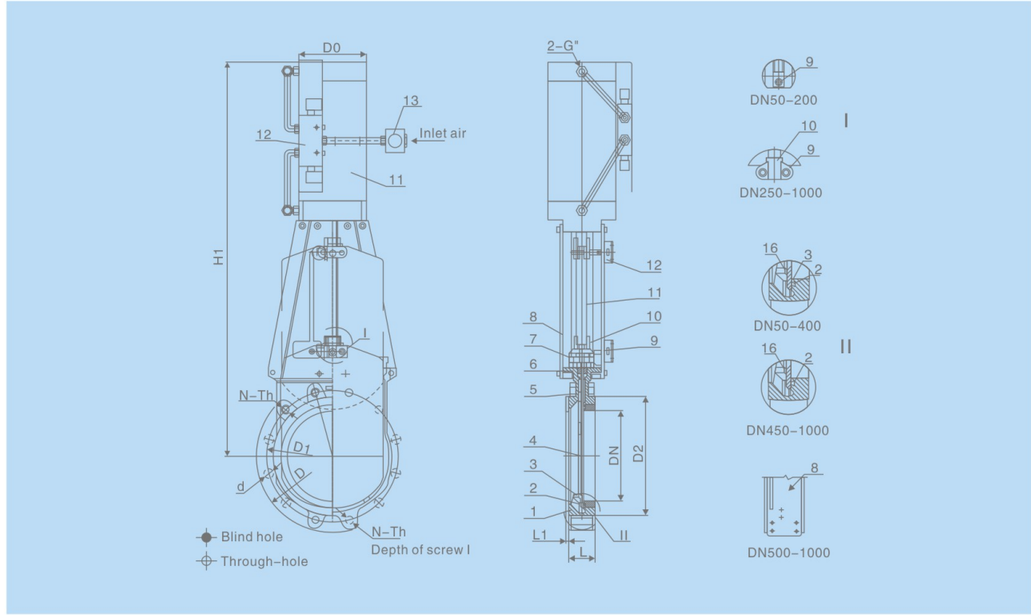

Parts and Materials

No.	Part Name	1	2	3	No.	Part Name	4	5	6
		WCBSeries	GGG40Series	CF8Series			CF8M	CF3M	SS 310
1	Body	WCB	GGG40	CF8	1	Body	CF8M	CF3M	SS 310
2	Sealing Rubber	EPDM	EPDM	EPDM	2	Sealing Rubber	EPDM	EPDM	EPDM
3	Seat	WCB	WCB	CF8	3	Seat	WCB	WCB	WCB
4	Gate	SS304	SS304	SS304	4	Gate	SS316L	SS316L	SS 310
5	Guide pad	PTFE	PTFE	PTFE	5	Guide pad	PTFE	PTFE	PTFE
6	Packing	PTFE	PTFE	PTFE	6	Packing	PTFE	PTFE	PTFE
7	Packing gland	WCB	WCB	CF8	7	Packing gland	CF8M	CF3M	SS 310
8	Bracket	Q235	Q235	Q235	8	Bracket	Q235	Q235	Q235
9	Pin	45#	45#	45#	9	Pin	45#	45#	45#
10	Clamping jaw	WCB	WCB	WCB	10	Clamping jaw	WCB	WCB	WCB
11	Piston rod	45#+Cr	45#+Cr	45#+Cr	11	Piston rod	45#+Cr	45#+Cr	45#+Cr
12	Position limit switch	Components	Components	Components	12	Position limit switch	Components	Components	Components
13	Pneumatics Actuator	Components	Components	Components	13	Pneumatics Actuator	Components	Components	Components
14	Solenoid valve	Components	Components	Components	14	Solenoid valve	Components	Components	Components
15	Filter	Components	Components	Components	15	Filter	Components	Components	Components
16	Wedge	WCB	GGG40	CF8	16	Wedge	WCB	GGG40	CF8
	Bolts&Nuts	Iron zinc plated	Iron zinc plated	A2-70		Bolts&Nuts	A4-70	A4-70	A4-70

S20 Series knife Gate Valve End Connection Types Dimensions

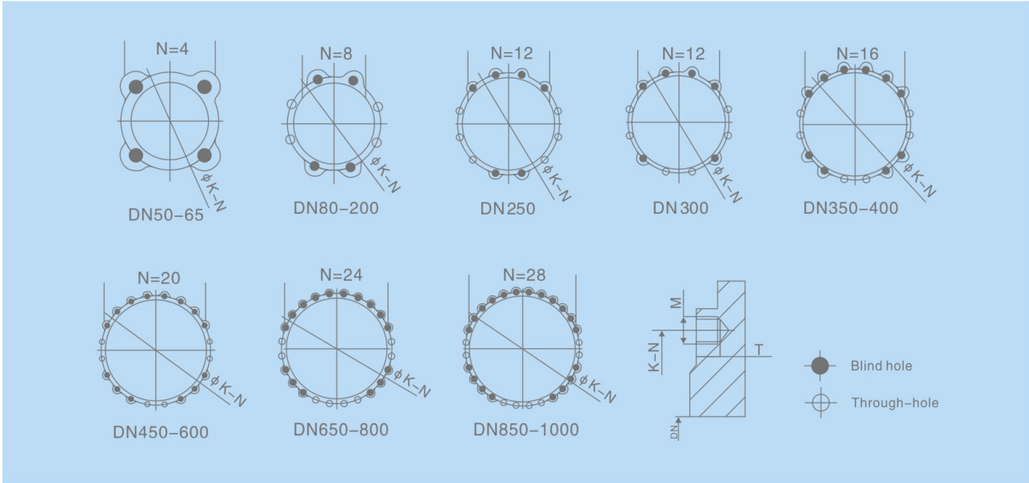

Dimensions

Nominal Diameter (mm)	GB/T9113.1 PN10 Size					
	D1	N	M	T	●	⊕
50	125	4	M16	12	4	0
65	145	4	M16	12	4	0
80	160	8	M16	12	4	4
100	180	8	M16	12	4	4
125	210	8	M16	12	4	4
150	240	8	M20	14	4	4
200	295	8	M20	16	4	4
250	350	12	M20	16	6	6
300	400	12	M20	16	6	6
350	460	16	M20	18	10	6
400	515	16	M24	20	10	6
450	565	20	M24	20	14	6
500	620	20	M24	24	14	6
600	725	20	M27	27	14	6
700	840	24	M27	27	16	8
800	950	24	M30	30	16	8
900	1050	28	M30	30	20	8
1000	1160	28	M33	35	20	8

Flowtecal
S20 Series Knife Gate Valve

S20 Series knife Gate Valve End Connection Types Dimensions

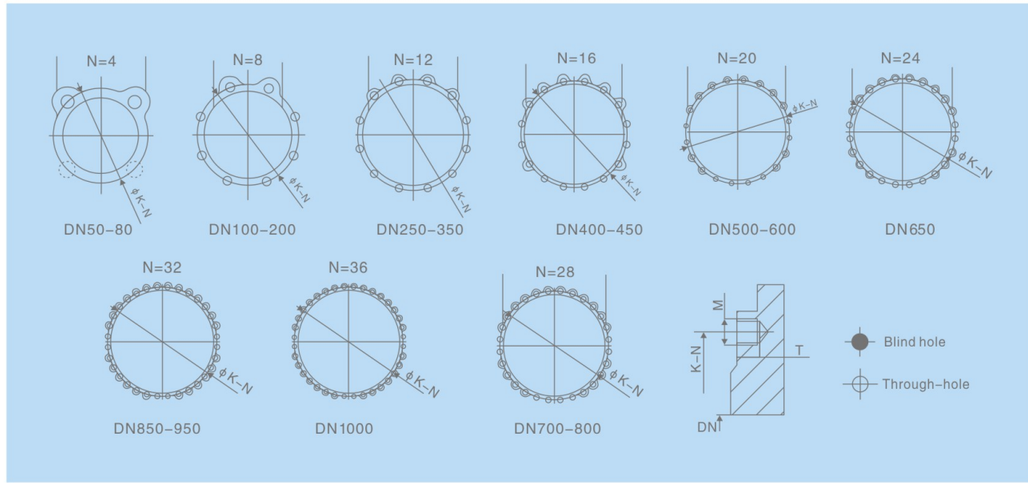

Dimensions

Nominal Diameter	ANSI B16.5/7 150LB Size						Nominal Diameter	ANSI B16.5/7 150LB Size					
DN(mm)	D1	N	M	T	●	⊕	DN(mm)	D1	N	M	T	●	⊕
50(2")	120.5	4	M5/8–11	14	4	0	350(14")	476	12	M1–8	18	6	6
65(2.5")	139.5	4	M5/8–11	14	4	0	400(16")	539.5	16	M1–8	21	8	8
80(3")	152.5	4	M5/8–11	14	4	4	450(18")	578	16	M11/8–7	21	10	6
100(4")	190.5	8	M5/8–11	14	4	4	500(20")	635	20	M11/8–7	21	12	8
125(5")	216	8	M3/4–10	14	4	4	600(24")	749.5	20	M11/4–7	23	12	8
150(6")	241.5	8	M3/4–10	18	4	4	700(28")	863.6	28	M11/4–7	25	18	10
200(8")	298.5	8	M3/4–10	18	4	4	800(32")	977.9	28	M11/2–6	25	20	8
250(10")	362	12	M7/8–9	18	6	6	900(36")	1085.8	32	M11/2–6	31	24	8
300(12")	432	12	M7/8–9	18	6	6	1000(40")	1200.2	36	M11/2–6	31	24	12

S20 Installation

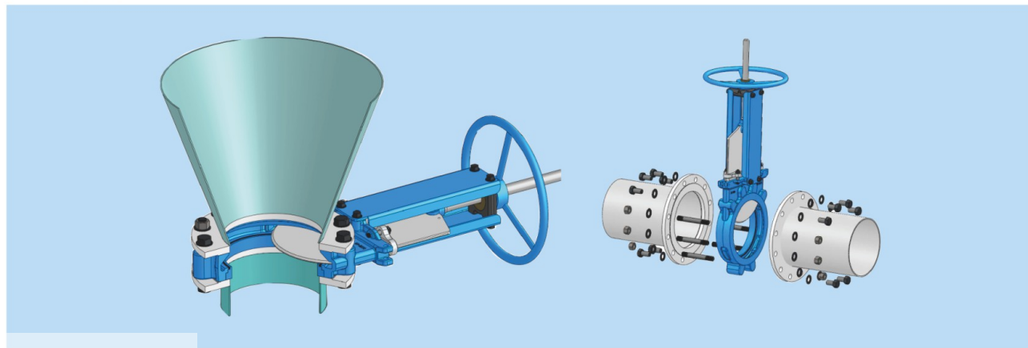

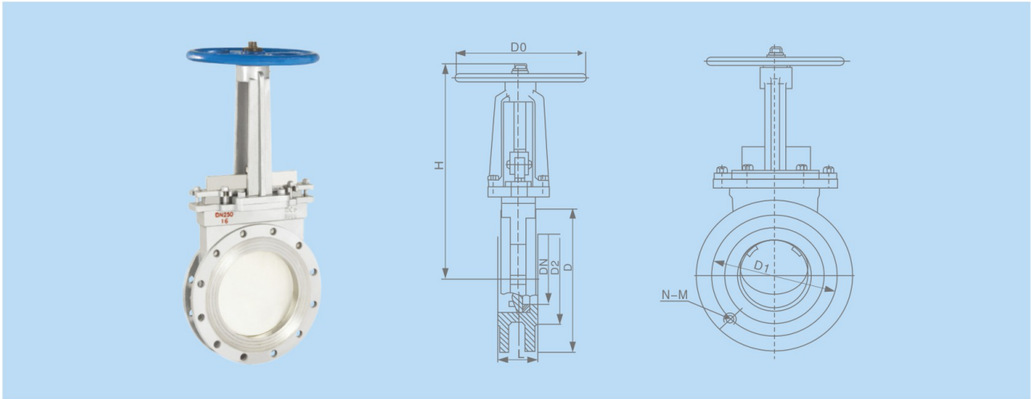

Dimensions

(PN0.6~1.6MPa)

PN(MPa)	DN(mm)	L	D	D1	D2	H	N-M	D0
		S2021、S2022						
0.6~1.6	50	50	160	125	100	285	4-M16	180
	65	50	180	145	120	298	4-M16	180
	80	50	195	160	135	315	4-M16	220
	100	50	215	180	155	365	8-M16	220
	125	50	245	210	185	400	8-M16	230
	150	70	280	240	210	470	8-M20	280
	200	70	335	295	265	540	8-M20	360
	250	70	390	350	320	630	12-M20	360
	300	80	440	400	368	780	12-M20	400
	350	90	500	460	428	885	16-M20	400
	400	100	565	515	482	990	16-M22	400
	450	120	615	565	532	1100	20-M22	530
	500	120	670	620	585	1200	20-M22	530
	600	120	780	725	685	1450	20-M27	600
	700	130	895	840	800	1700	24-M27	600
	800	130	1010	950	905	2000	24-M30	680
	900	140	1110	1050	1005	2300	28-M30	680

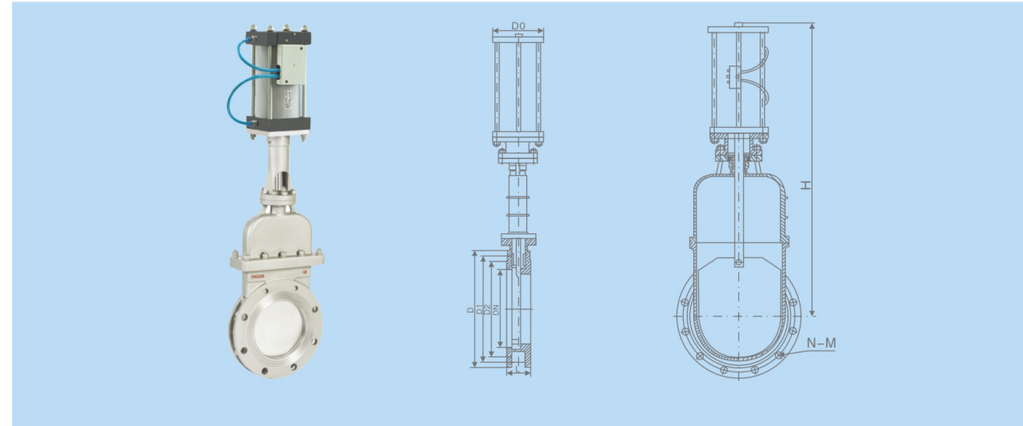

Standard

Design & Manufacture	Face-to-Face	End Connection	Inspection and Testing
JB/T8691-1998	JB/T15188.2-94	GB/T9113.1-2000 JB/T79-94	GB/T13927-92

Parts and Materials

Body, Bonnet	DI,WCB,304SS,316SS
Gate	304SS,316SS
Stem	420SS,304SS,316SS
Sealing ring	NBE,EPDM,Viton,PTFE, 304SS,316SS,Stellite

Performance Specification

Nominal Pressure	PN
Shell Test	1.5XPN
Sealing test	1.1XPN
Working temperature	Rubber≤80℃ PTFE≤180℃ Hard seated≤425℃
Applicable Medium	Paper pulp Sewage, Gas,etc

Dimensions

PN(MPa)	DN(mm)	L	D	D1	D2	H	N-M	D0
		S2120-****、S2121-****、S2122-****						
1.0	150	70	280	240	210	730	8-M20	280
	200	80	335	295	265	910	8-M20	360
	250	85	390	350	320	1050	12-M20	360
	300	100	440	400	368	1265	12-M20	400
	350	100	500	460	428	1470	16-M20	400
	400	110	565	515	482	1630	16-M22	400
	450	120	615	565	532	1810	20-M22	530
	500	130	670	620	585	1970	20-M22	530
	600	140	780	725	685	2290	20-M27	600
	700	165	895	840	800	2560	24-M27	600
	800	190	1010	950	905	2990	24-M30	680
	900	200	1110	1050	1005	3200	28-M30	680
	1000	–	1230	1160	1112	3800	28-M33	–

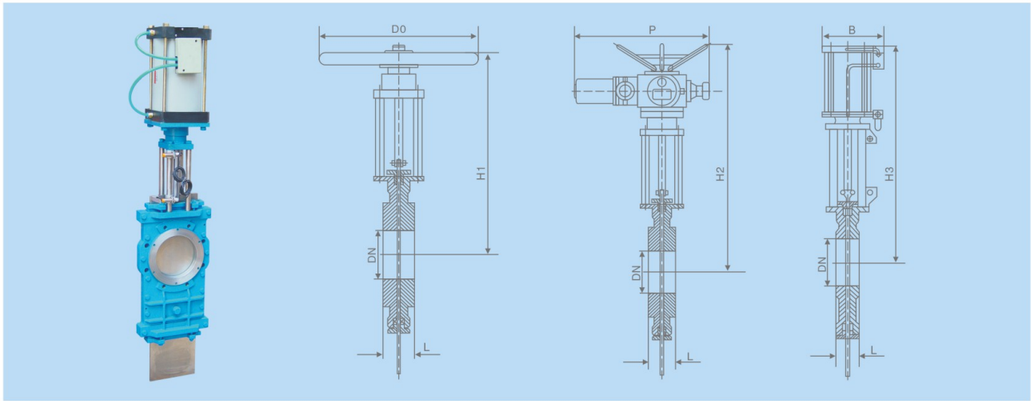

Standard

Design & Manufacture	Face-to-Face	Inspection and Testing	Pressure-Temperature
JB/T 7746、API602	JB/T 7746	JB/T 9092、API598	GB/T 9131、ANSI B16.34

Parts and Materials

Body, Bonnet	DI,WCB,304SS,316SS
Gate	304SS,316SS
Stem	420SS,304SS,316SS
Sealing ring	NBE,EPDM,Viton,PTFE, 304SS,316SS,Stellite

Performance Specification

Nominal Pressure	PN
Shell Test	1.5XPN
Sealing test	1.1XPN
Working temperature	Rubber≤80℃ PTFE≤180℃
Applicable Medium	Dry ash, Pulp, Syrup, Sewage, Gas powder particles, Slag water mixture, etc

Dimensions

(PN1.0/1.6MPa)

DN(mm)	L	H1	H2	H3	D1	D2	D0	N-M	P	B
S2221-****、S2222-****										
100	51	405	705	585	180	156	240	8-M16	490	170
125	57	450	750	665	210	184	260	8-M16	490	190
150	57	510	810	770	240	211	280	8-M20	490	240
200	70	615	930	920	295	266	300	12-M20	520	335
250	70	715	1080	1175	355	319	320	12-M24	520	335
300	76	822	1140	1255	410	370	340	12-M24	520	335
350	76	975	1290	1455	470	429	360	16-M24	520	350
400	89	1024	1344	1559	525	480	400	16-M27	605	390
450	89	1235	1560	1926	585	548	450	20-M27	605	430
500	114	1265	1610	2226	650	609	500	20-M30	605	430

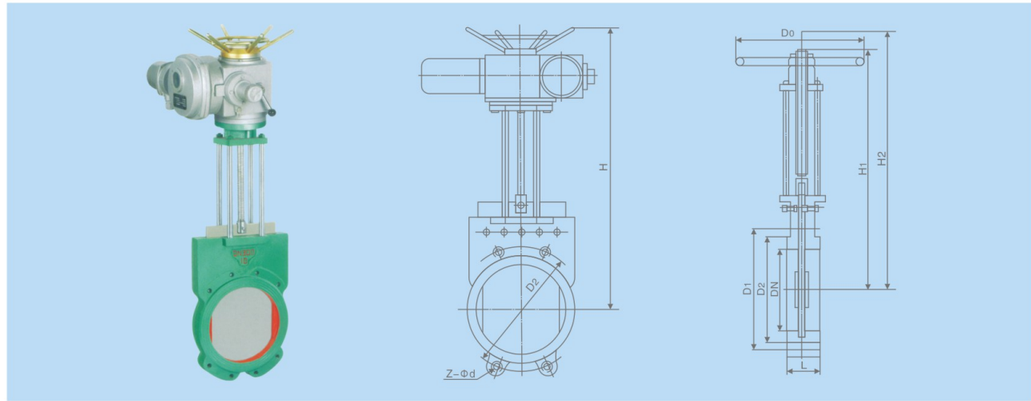

Dimensions and Weight

(PN0.25/0.6/1.0/1.6MPa)

DN(mm)	L	D1	D2	Z-Φd	H	H1	D0	WT(kg)
SL20**-****								(PN0.25/0.6/1.0MPa)
50	40	125	100	4-M16	337	268	180	80
65	40	145	120	4-M16	357	291	180	90
80	50	160	135	8-M16	400	316	180	112
100	50	180	155	8-M16	466	364	200	140
150	60	270	210	8-M20	633	478	240	195
200	60	295	265	8-M20	744	543	280	260
250	70	350	313	12-M20	940	687	360	370
300	70	400	368	12-M20	1087	783	360	455
350	80	460	430	16-M20	1238	885	400	640
400	80	515	482	16-M24	1394	994	400	960
450	90	565	532	20-M24	1550	1100	400	1280
500	90	620	585	20-M24	1700	1200	400	1710
600	100	725	685	20-M27	2080	1480	400	1895
700	100	840	800	24-M27	1720	2470	800	2100
800	120	950	905	24-M30	2000	2900	800	2410
900	150	1050	1005	28-M30	2130	3100	800	2660
SL20**-****								(PN1.6MPa)
200	60	295	180	12-M20	754	552	240	265
250	68	355	230	12-M24	945	692	240	376
300	78	410	280	12-M24	1010	788	370	455
350	78	470	330	16-M24	1245	890	370	648
400	102	525	380	16-M24	1685	1000	400	970
450	114	585	430	20-M27	1835	1110	400	1300
500	127	650	480	20-M30	1926	1230	400	1760
600	154	770	700	20-M36	2360	1500	800	1980

Flowtecal

Model No. of Flowtecal Globe Valve

DN50	G60	01	–	W	O	S	M	RF
▼ 1	▼ 2	▼ 3		▼ 4	▼ 5	▼ 6	▼ 7	▼ 8

1 Nominal diameter

DN50 (or 2")

2 Valve Model

G60 Globe valve (flat seal)
GC60 Globe valve (Cone seal)
G61 Angle type globe valve (flat seal)
GC61 Angle type globe valve (cone seal)
G62 Inside screw globe valve
G63 Bellow seal globe valve (flat seal)
Gc63 Bellow seal globe valve (flat seal)
G69 Forged Globe valve
GC69 Forged angle type globe valve

3 Valve pressure rating

01 ANSI 150Lb
02 ANSI 300Lb
03 ANSI 600Lb
11 DIN PN10
12 DIN PN16
13 DIN PN25
14 DIN PN40
15 DIN PN64
16 DIN PN100
21 GB PN10 Bar
22 GB PN16 Bar
23 GB PN25 Bar
24 GB PN40 Bar
25 GB PN64 Bar
26 GB PN100 Bar

4 Body material

W A216–WCB
0 CF8 / 304SS
1 CF8M / 316SS
2 CF3M / 316L
3 2205 Duplex
4 2507 Duplex
6 WC6
7 WC9
V 12Cr1MoV

5 Disc material

W A216–WCB
0 CF8 / 304SS
1 CF8M / 316SS
2 CF3M / 316L
3 2205 Duplex
4 2507 Duplex
6 WC6
7 WC9
V 12Cr1MoV

6 Stem material

W 45#steel
S 420SS or 2Cr13
H 17–4PH
0 304SS
1 316SS
5 Other material

7 Seat material

M Body hardening treatment
0 304SS
1 316SS
S Stellite
P PTFE

8 End Connection

RF Raised face flange
RTJ Grooved surface flange connection
BW Butt welded connection

Flowtecal

Globe Valve Structure

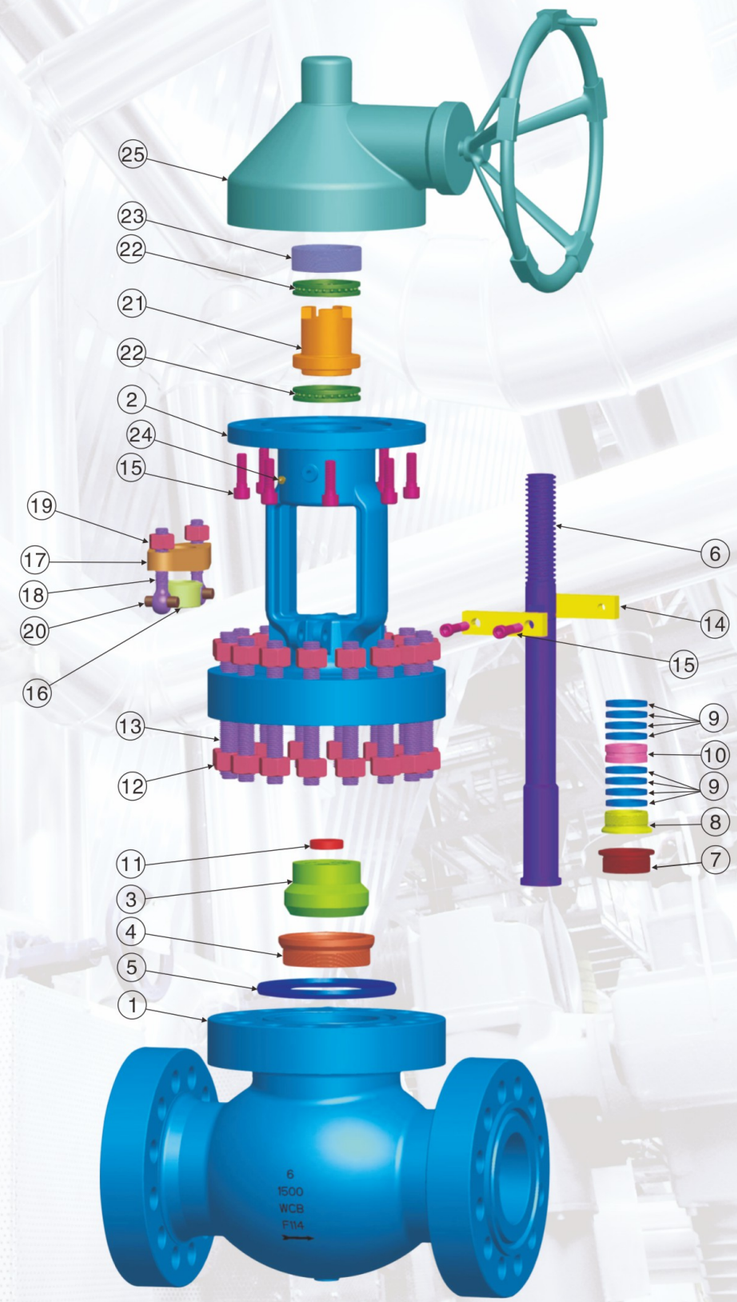

Flowtecal

Globe Valve Structure

Features

This series of globe valve is suitable for working pressure PN1.6~42.0MPa (CL150~CL2500), the working temperature of –46~550℃ condition ,such as petroleum, chemical, pharmaceutical, chemical fertilizer, electric power industry and other pipeline, with the function of cutting off or connecting medium on the pipeline .

Major Structure features:

1, Reasonable structure design, good sealing, excellent performance, attractive appearance;
2, The sealing surface is welded with Co based carbide which have good performance in wear resistance, corrosion resistance, scratch resistance, long service life;
3, The stem have been treated with the quenching tempering and nitriding treatment, which have good corrosion resistance and scratch resistance;
4, The valve has back seal structure with good sealing;
5, The material of components and flange dimension are designed and selected according to actual conditions or reasonable requirements of end user , to meet the needs of various projects.

Major Parts

No.	Part name	No.	Part name
01	Body	14	Limit block
02	Bonnet	15	Hexagon head screw
03	Gate	16	packing bushing
04	Seat	17	packing gland
05	Middle flange gasket	18	Eyebolt
06	Stem	19	Nut
07	Disc cap Bonnet	20	Pin
08	Packing container	21	Stem nut
09	Packing	22	Pushing bearing
10	Spacer ring	23	Lock nut
11	Disc pad	24	Oil cup
12	Nut	25	Bevel gear part
13	Stud	–	–

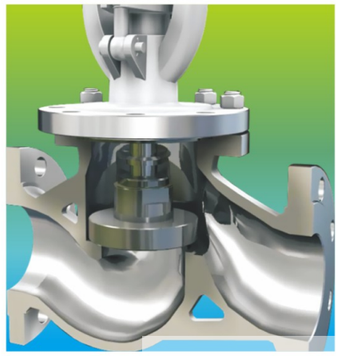

Flowtecal

GB Series Globe Valve

Application

This series of globe valve is suitable for working condition under nominal pressure PN1.6~16.0MPa , and under the working temperature of –46~550 ℃ ,such as petroleum, chemical, pharmaceutical, chemical fertilizer, electric power industry and other pipeline, with the function of cutting off or connecting medium on the pipeline.

Features

1, Reasonable structure design, good sealing, excellent performance, attractive appearance;
2, The sealing surface is welded with Co based carbide which have good performance in wear resistance, corrosion resistance, scratch resistance, long service life;
3, The stem have been treated with the quenching tempering and nitriding treatment, which have good corrosion resistance and scratch resistance;
4, The valve has back seal structure with good sealing;
5, The material of components and flange dimension are designed and selected according to actual conditions or reasonable requirements of end user , to meet the needs of various projects.

Standard

Design & Manufacture	Design Standard	Face-to-Face	End Connection	Inspection and Testing	Pressure-Temperature
	GB/T 12235	GB/T 12221	JB/T 79.1、GB/T9113 HG/T20592	JB/T 9092 GB/T13927	GB/T12224

Performance Specification

1、Test pressure

Nominal Pressure (MPa)	1.6	2.5	4.0	6.4	10.0	16.0
Shell strength test	2.4	3.8	6.0	9.6	15	24
Back seal test	1.8	2.8	4.4	7.0	11	18
Sealing test	1.8	2.8	4.4	7.0	11	18

2、The applicable medium and the applicable temperature

Product type	Applicable Medium	Applicable temperature(℃)
WCB Series G60、GC60	Water, oil, steam	≤425
CF 8 Series G60、Gc60	Nitrate class	≤200
CF8M Series G60、GC60	Acetic acid	≤200
Cr Mo steel Globe valve SeriesG60、GC60	Water, oil, steam	≤550

Parts and Materials

Body/Bonnet/Disc	Stem	Sealing face	Gasket (ring)	Packing	Working temperature (℃)	Applicable Medium
WCB	2Cr13	13Cr STL Body material PTFE Nylon	Reinforced flexible graphite 13Cr /Flexible graphite SFB–2 08 Titanium steel F304 F316 F304L F316L	Flexible graphite Reinforced flexible graphite SFB/260 SFP/260 PTFE	≤425	Water, steam, oil
WC1	38CrMoAl 25Cr2MoV				≤450	
WC6					≤540	
WC9					≤570	
C5 C12					≤540	
CF8	F304				≤600	Nitric acid, acetic acid, urea
CF3	F316					
CF8M	F304L					
CF3M	F316L					

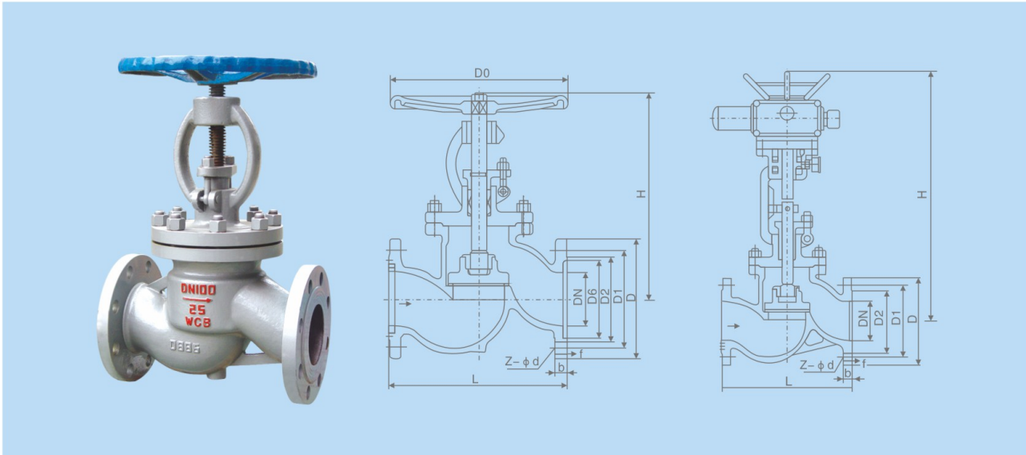

Dimensions and Weight

(PN1.6MPa)

DN(mm)	L	D	D_1	D_2	b	f	Z-ϕd	H	D_0	WT (kg)
G6022-****、GC6022-****										
10	130	90	60	40	14	2	4-14	198	120	4.7
15	130	95	65	45	14	2	4-14	218	120	5.2
20	150	105	75	55	14	2	4-14	258	140	7.1
25	160	115	85	65	14	2	4-14	275	160	7.4
32	180	135	100	78	15	2	4-18	280	180	8.5
40	200	145	110	85	16	2	4-18	330	200	12.5
50	230	160	125	100	16	3	4-18	350	240	20
65	290	180	145	120	18	3	4-18	400	280	25
80	310	195	160	135	20	3	8-18	355	280	35
100	350	215	180	155	20	3	8-18	415	320	50
125	400	245	210	185	22	3	8-18	460	360	75
150	480	280	240	210	24	3	8-23	510	400	100
200	600	335	295	205	26	3	12-23	710	400	210
250	650	405	355	320	30	3	12-23	789	450	446
300	750	460	410	375	30	3	12-23	925	500	648

Dimensions and Weight

(PN2.5MPa)

DN(mm)	L	D	D_1	D_2	b	f	Z-ϕd	H (Manual)	H (Electric)	D_0	Electric actuator	WT (kg)	
												Manual	Electric
G6023-****、GC6023-****													
10	130	90	60	40	16	2	4-14	198	-	120	-	4.9	-
15	130	95	65	45	16	2	4-14	218	-	120	-	5.4	-
20	150	105	75	55	16	2	4-14	258	-	140	-	7	-
25	160	115	85	65	16	2	4-14	275	-	160	-	7.4	-
32	180	135	100	78	18	2	4-18	280	-	180	-	8.5	-
40	200	145	110	85	18	3	4-18	330	-	200	-	12.5	-
50	230	160	125	100	20	3	4-18	350	645	240	DZW101	16	50
65	290	180	145	120	22	3	8-18	400	690	280	DZW101	25	62
80	310	195	160	135	22	3	8-18	355	715	280	DZW151	30	67
100	350	230	190	160	24	3	8-23	415	770	320	DZW20	34.5	73
125	400	270	220	188	28	3	8-25	460	780	360	DZW30	89	127
150	480	300	250	218	30	3	8-25	510	875	400	DZW45	98	215
200	600	360	310	278	34	3	12-25	710	967	400	DZW60	180	322
250	650	425	370	332	36	3	12-30	789	-	450	-	446	-
300	750	485	430	390	40	4	12-30	925	-	500	-	654	-

Dimensions and Weight

(PN4.0MPa)

DN(mm)	L	D	D_1	D_2	b	f	f_2	Z-ϕd	H (Manual)	H (Electric)	D_0	Electric actuator	WT (kg)	
													Manual	Electric
G6024-****、GC6024-****														
10	130	90	60	40	16	2	4	4-14	198	-	120	-	4.9	-
15	130	95	65	45	16	2	4	4-14	238	-	120	-	5.4	-
20	150	105	75	55	16	2	4	4-14	275	-	140	-	7	-
25	160	115	85	65	16	2	4	4-14	285	-	160	-	8.8	-
32	180	135	100	78	18	2	4	4-18	302	-	180	-	11.8	-
40	200	145	110	85	18	3	4	4-18	355	-	200	-	16.5	-
50	230	160	125	100	20	3	4	4-18	370	645	240	DZW101	24	61
65	290	180	145	120	22	3	4	8-18	408	690	280	DZW101	33	75
80	310	195	160	135	22	3	4	8-18	436	715	320	DZW201	44	84
100	350	230	190	160	24	3	4.5	8-23	480	770	360	DZW301	60	101
125	400	270	220	188	28	3	4.5	8-25	558	782	400	DZW45	89	207
150	480	300	250	218	30	3	4.5	8-25	611	875	400	DZW60	98	226
200	600	375	320	282	38	3	4.5	12-30	720	1160	400	DZW901	190	339

Dimensions and Weight

(PN6.4~16.0MPa)

DN(mm)	L	D	D_1	D_2	b	f	f_2	Z-ϕd	H (Manual)	H (Electric)	D_0	Electric actuator	WT (kg)	
													Manual	Electric
G6025-**** 、GC6025-****														
10	170	100	70	50	18	2	4	4-14	198	-	120	-	5.7	-
15	170	105	75	55	18	2	4	4-14	195	-	140	-	10	-
20	190	125	90	68	20	2	4	4-18	228	-	160	-	13	-
25	210	135	100	78	22	2	4	4-18	275	-	180	-	14.5	-
32	230	150	110	82	24	2	4	4-23	325	-	200	-	19	-
40	260	165	125	95	24	3	4	4-23	360	-	240	-	25	-
50	300	175	135	105	26	3	4	8-23	410	710	280	DZW10	35	64
65	340	200	160	130	28	3	4	8-23	450	750	320	DZW15	48	77
80	380	210	170	140	30	3	4	8-18	485	785	360	DZW30	56	88
100	430	250	200	168	32	3	4	8-25	537	837	400	DZW45	125	171
125	500	295	240	202	36	3	4	8-30	631	-	400	-	131	-
150	550	340	280	240	38	3	4	8-34	646	-	450	-	157	-
200	650	405	345	300	44	3	4	12-34	813	-	500	-	283	-
G6026-**** 、GC6026-****														
10	170	100	70	50	20	2	4	4-14	198	-	120	-	6	-
15	170	105	75	55	20	2	4	4-14	202	-	140	-	11	-
20	190	125	90	68	22	2	4	4-18	228	-	160	-	13.2	-
25	210	135	100	78	24	2	4	4-18	250	-	180	-	14	-
32	230	150	110	82	24	2	4	4-23	326	-	220	-	15	-
40	260	165	125	95	26	3	4	4-23	359	-	240	-	29	-
50	300	195	145	112	28	3	4	4-25	414	710	280	DZW10	49	82
65	340	220	170	138	32	3	4	8-25	434	750	320	DZW15	65	104
80	380	230	180	148	34	3	4	8-25	547	785	400	DZW30	95	138
100	430	265	210	172	38	3	4.5	8-30	621	837	450	DZW45	115	243
125	500	310	250	210	42	3	4.5	8-34	732	-	450	-	149	-
150	550	350	290	250	46	3	4.5	12-34	840	-	500	-	310	-
200	650	430	360	312	54	3	4.5	12-41	925	-	550	-	590	-
G6027-**** 、GC6027-****														
15	170	110	75	52	24	2	4	4-18	148	-	140	-	12.2	-
20	190	130	90	65	26	2	4	4-23	156	-	160	-	15	-
25	210	140	100	72	28	2	4	4-23	125	-	180	-	17	-
32	230	165	115	85	30	2	4	4-25	200	-	200	-	21.4	-
40	260	175	125	92	32	3	4	4-27	231	-	240	-	32	-
50	300	215	165	132	36	3	4	8-25	262	-	250	-	52	-
65	340	245	190	152	44	3	4	8-30	303	-	320	-	69	-
80	380	260	205	168	46	3	4	8-30	341	-	400	-	98	-
100	430	300	240	200	48	3	4.5	8-34	485	-	450	-	119	-

Technical Specification

Standard	GB Series
Design & Manufacture	GB/12233
Face-to-Face	GB/12221
End Connection	GB/9113、JB/T79
Inspection and Testing	GB/T13927、JB/T9092

Note: The face to face length and flange dimension can be designed and produced according to the user's requirements.

Parts and Materials

No.	Part name	Material		
1	Body	WCB	CF8	CF8M
2	Gasket	Flexible graphite +Stainless steel	PTFE	PTFE
3	Bolt	35	304	304
4	Disc	WCB+Bead weld304 Or Stelite、PTFE	304	316
5	Split collar	304	304	316
6	Disc cap	CF8	CF8	CF8M
7	Stem	420	304	316
8	Nut	35	304	304
9	Eyebolt	35	304	304
10	Bonnet	WCB	CF8	CF8M
11	Bolt	35	304	304
12	Gasket	35	CF8	CF8M
13	Packing	Flexible graphite	PTFE	PTFE
14	Packing Gland	WCB	CF8	CF8M
15	Nut	35	304	304

Note: The material of major parts and sealing surface can be designed and selected according to the working condition or the special requirement of user.

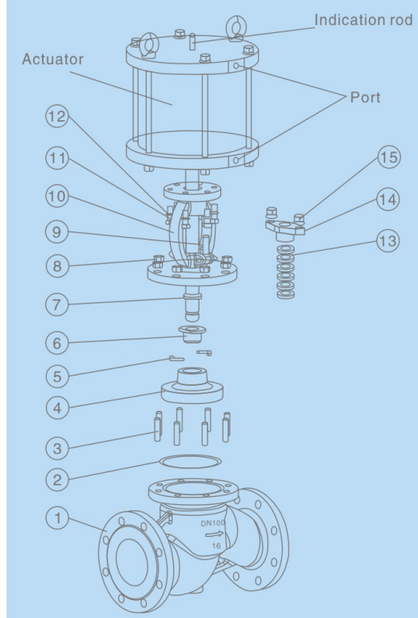

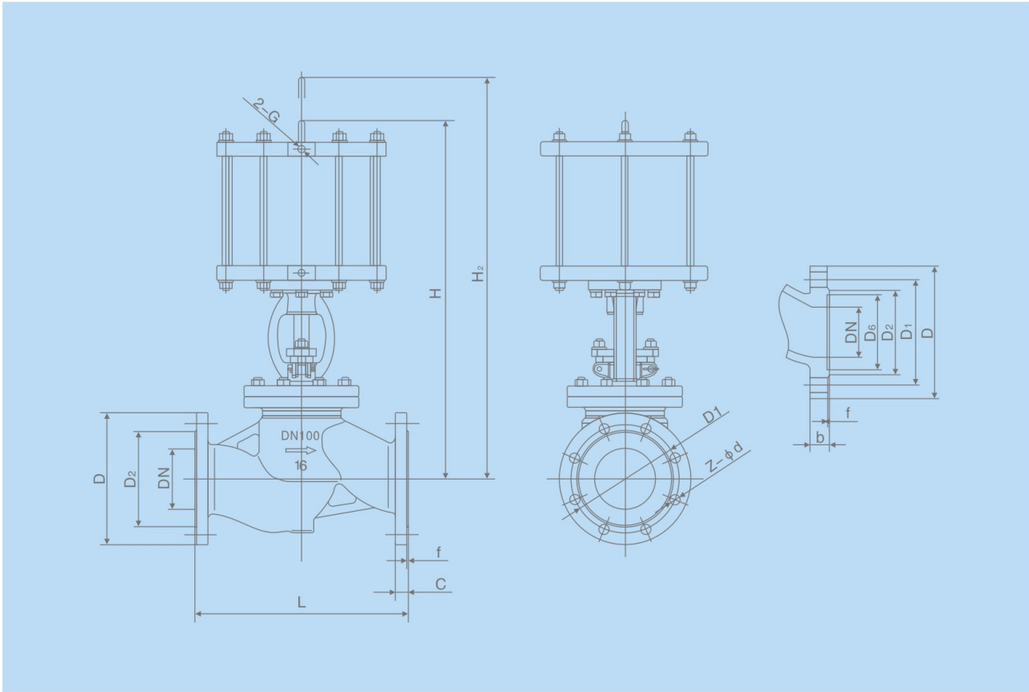

Dimensions

(PN16MPa)

DN(mm)	Overall Dimension		Connection Dimension							Air connection
	L	H	D	D1	D2	C	f	N	ϕd	
15	130	291	95	65	46	14	2	4	14	1/4"
20	150	300	105	75	56	16	2	4	14	
25	160	353	115	85	65	16	2	4	14	
32	180	390	140	100	76	18	2	4	18	
40	200	518	150	110	84	18	3	4	18	
50	230	555	165	125	99	20	3	4	18	
65	290	630	185	145	118	20	3	4	18	
80	310	683	200	160	132	20	3	8	18	
100	350	745	220	180	156	22	3	8	18	3/8"
125	400	855	250	210	184	22	3	8	18	
150	480	870	285	240	211	24	3	8	22	
200	600	954	340	295	266	24	3	12	22	
250	730	1065	405	355	319	26	3	12	26	
300	850	1185	460	410	370	28	4	12	26	

Note: To choose the actuator according to different torque of valve and medium, the related dimension should be changed accordingly.

Flowtecal
GB Series Pneumatic Globe Valve

Dimensions

(PN25MPa)

DN(mm)	Overall Dimension		Connection Dimension							Air connection
	L	H	D	D1	D2	C	f	N	ϕd	
15	130	291	95	65	46	14	2	4	14	1/4"
20	150	300	105	75	56	16	2	4	14	
25	160	353	115	85	65	16	2	4	14	
32	180	390	140	100	76	18	2	4	18	
40	200	518	150	110	84	18	3	4	18	
50	230	555	165	125	99	20	3	4	18	
65	290	630	185	145	118	22	3	8	18	
80	310	683	200	160	132	24	3	8	18	
100	350	745	235	180	156	24	3	8	22	3/8"
125	400	855	270	220	184	26	3	8	26	
150	480	870	300	250	211	28	3	8	26	
200	600	954	360	310	274	30	3	12	26	
250	730	1065	425	370	330	32	3	12	30	
300	850	1185	485	430	389	34	4	16	30	

Dimensions

(PN40MPa)

DN(mm)	Overall Dimension		Connection Dimension									Air connection
	L	H	D	D1	D2	C	f	N	ϕd	D3	X	
15	130	305	95	65	46	14	2	4	14	40	4	1/4"
20	150	316	105	75	56	16	2	4	14	51	4	
25	160	373	115	85	65	16	2	4	14	58	4	
32	180	416	140	100	76	18	2	4	18	66	4	
40	200	530	150	110	84	18	3	4	18	76	4	
50	230	575	165	125	99	20	3	4	18	88	4	
65	290	656	185	145	118	22	3	8	18	110	4	
80	310	713	200	160	132	24	3	8	18	121	4	
100	350	775	235	190	156	24	3	8	22	150	4.5	3/8"
125	400	892	270	220	184	26	3	8	26	176	4.5	
150	480	940	300	250	211	28	3	8	26	204	4.5	
200	600	1054	375	320	284	34	3	12	30	260	4.5	
250	730	1115	450	385	345	38	3	12	33	313	4.5	
300	850	1235	515	450	409	42	4	16	33	364	4.5	

Note: To choose the actuator according to different torque of valve and medium, the related dimension should be changed accordingly.

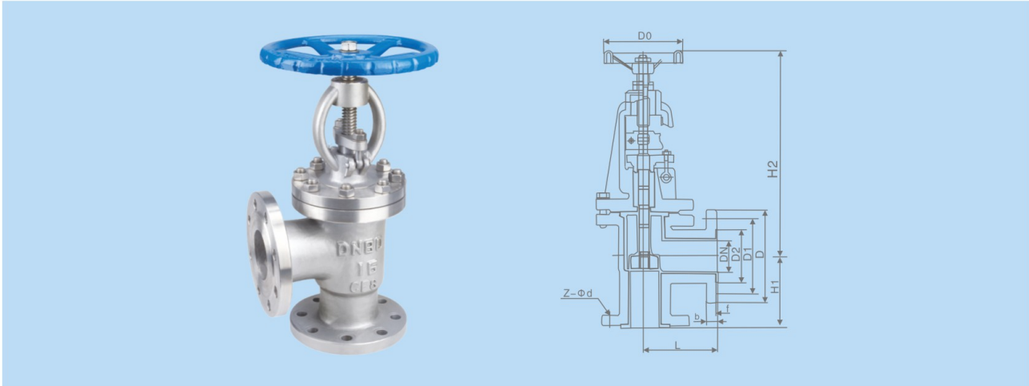

Performance Specification

1、Test pressure

Nominal Pressure (MPa)	1、Test pressure(MPa)			
	Shell	Seal (liquid)	Seal (gas)	Back seat
1.6	2.4	1.8	0.6	1.8
2.5	3.8	2.8	0.6	2.8
4.0	6.0	4.4	0.6	4.4
6.4	9.6	7.0	0.6	7.0
10.0	15.0	11.0	0.6	11.0
16.0	24.0	18.0	0.6	18.0

2.Scope of application

Body material	Applicable Medium	Applicable temperature(℃)
WCB	Water, steam, oil	≤425
304SS	Nitrate class	≤200
304SS	Acetic acid	≤200
WC 9	Water, steam, oil	≤550

Dimensions

(PN1.6/2.5MPa)

DN(mm)	L	D	D1	D2	b	f	Z-Φd	D0	H1	H2
G6122-**** 、G6123-****										
25	160	115	85	65	18	3	4-14	100	220	236
32	180	135	100	78	18	3	4-18	120	251	273
40	200	145	110	85	20	3	4-18	140	283	306
50	230	160	125	100	20	3	4-18	160	316	344
65	290	180	145	120	22	3	4-18	180	353	383
80	310	195	160	135	22	3	8-18	200	437	479
100	350	215	180	155	24	3	8-18	240	479	529
125	400	245	210	180	26	3	8-18	280	542	608
150	480	280	240	210	28	4	8-18	320	605	680
200	600	335	295	265	30	4	12-23	360	650	755

Application

This series of globe valve is suitable for working condition under nominal pressure Class150~2500 , and under the working temperature≤600℃ ,such as petroleum, chemical, pharmaceutical, chemical fertilizer, electric power industry and other pipeline, with the function of cutting off or connecting medium on the pipeline

Features

1, Designed and manufactured according to ASME B 16.34 and BS 1873,reasonable structure design, good sealing, excellent performance, attractive appearance.
2, The sealing surface is welded with Co based carbide which have good performance in wear resistance, corrosion resistance, scratch resistance, long service life.
3, The stem have been treated with the quenching tempering and nitriding treatment, which have good corrosion resistance and scratch resistance.
4,Using pressure seal structure if the pressure is higher than class 1500, the tightness increase with the increase of internal pressure, which ensure the sealing performance.
5, The valve has back seal structure with good sealing.
6, The material of components and flange dimension are designed and selected according to actual conditions or reasonable requirements of end user , to meet the needs of various projects.

Standard

Design & Manufacture	Design Standard	Face-to-Face	End Connection	Inspection and Testing	Pressure -Temperature
	ASME B 16.34 BS1873	ASME B16.10	ASME B16.5	API 598	ASME B16.34

Performance Specification

Nominal Pressure (Lb)	Shell Test		Water Seal Test		Air sealing test	
	MPa	Lbf/in²	MPa	Lbf/in²	MPa	Lbf/in²
150	3.1	450	2.2	315	0.5~0.7	60~100
300	7.8	1125	5.6	815		
600	15.3	2225	11.2	1630		
900	23.1	3350	16.8	2440		
1500	38.4	5575	28.1	4080		
2500	64.6	9367	47.4	6873		

Parts and Materials

Body/Bonnet/Disc	Stem	Sealing face	Gasket (ring)	Packing	Working temperature (℃)	Applicable Medium
WCB	2Cr13	13Cr STL Body material PTFE Nylon	Reinforced flexible graphite 13Cr /Flexible graphite SFB-2 08 Titanium steel F304 F316 F304L F316L	Flexible graphite Reinforced flexible graphite SFB/260 SFP/260 PTFE	≤425	Water, steam, oil
WC1	38CrMoAl 25Cr2MoV				≤450	
WC6					≤540	
WC9					≤570	
C5 C12					≤540	
CF8	F304				≤600	Nitric acid, acetic acid, urea
CF3	F316					
CF8M	F304L					
CF3M	F316L					

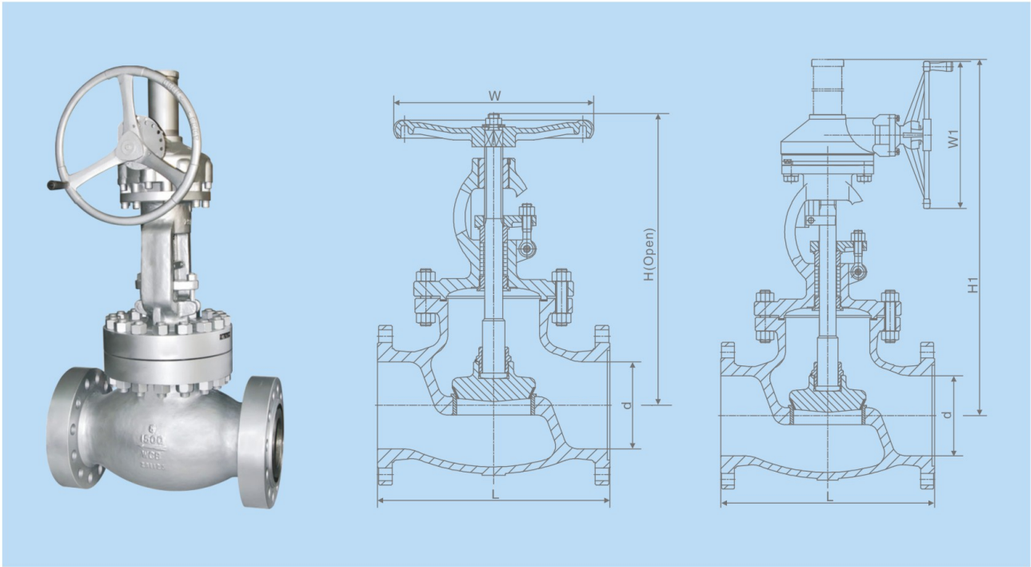

Dimensions and Weight

Class150

Class	NPS (in)	DN (mm)	L			d	H	H_1	W	W_1	WT (kg)	
			RF	RTJ	BW						Hand-wheel	Driving device
150	1/2	15	108	119	108	13	182	–	100	–	3	–
	3/4	20	117	130	117	19	193	–	100	–	4	–
	1	25	127	140	127	25	217	–	100	–	5	–
	1 1/4	32	140	152	140	32	235	–	135	–	8	–
	1 1/2	40	165	178	165	38	258	–	135	–	9	–
	2	50	203	216	203	51	330	–	200	–	19	–
	2 1/2	65	216	229	216	64	360	–	250	–	27	–
	3	80	241	254	241	76	390	–	280	–	36	–
	4	100	292	305	292	102	445	–	300	–	53	–
	5	125	356	369	356	127	480	–	350	–	75	–
	6	150	406	419	406	152	520	556	350	310	94	126
	8	200	495	508	495	203	600	658	400	310	148	180
	10	250	622	635	622	254	773	805	450	460	242	291
	12	300	698	711	698	305	880	955	500	460	438	480

Dimensions and Weight

Class300~900

Class	NPS (in)	DN (mm)	L			d	H	H1	W	W1	WT (kg)	
			RF	RTJ	BW						Hand-wheel	Driving device
300	1/2	15	152	164	152	13	185	–	100	–	5	–
	3/4	20	178	191	178	19	195	–	100	–	7	–
	1	25	203	216	203	25	220	–	135	–	10	–
	1 1/4	32	216	229	216	32	240	–	135	–	14	–
	1 1/2	40	229	241	229	38	260	–	160	–	19	–
	2	50	267	283	267	51	385	–	200	–	25	–
	2 1/2	65	292	308	292	64	420	–	200	–	42	–
	3	80	318	333	318	76	440	–	280	–	46	–
	4	100	356	371	356	102	515	–	350	–	74	–
	5	125	400	416	400	127	580	–	350	–	111	–
	6	150	444	460	444	152	660	690	400	310	165	195
	8	200	559	575	559	203	900	950	550	460	275	327
	10	250	622	638	622	254	950	990	600	460	400	452
	12	300	711	727	711	305	1030	1080	700	460	624	725
600	2	50	292	295	292	51	360	–	250	–	32	–
	2 1/2	65	330	333	330	64	410	–	280	–	42	–
	3	80	356	359	356	76	465	–	300	–	63	–
	4	100	432	435	432	102	545	575	400	310	107	138
	5	125	508	511	508	127	625	660	500	310	185	215
	6	150	559	562	559	152	785	820	550	460	290	342
	8	200	660	664	660	200	930	960	650	460	540	645
900	2	50	368	371	368	47	480	–	350	–	55	–
	2 1/2	65	419	422	419	57	520	–	350	–	68	–
	3	80	381	384	381	73	564	630	400	310	95	128
	4	100	457	460	457	98	685	720	450	310	160	210
	5	125	559	562	559	121	780	840	550	460	270	325
	6	150	610	613	610	146	950	1015	650	460	410	480

Flowtecal

Forged Steel Globe Valve

Application

Forged steel globe valve is not only applied on Low & Middle pressure ,but also applied on high pressure service, widely used in petroleum, chemical, pharmaceutical, chemical fertilizer, electric power industry and other pipeline, with the function of cutting off or connecting medium on the pipeline.

Features

1, Compact structure, attractive appearance, reduced bore. BB or WB
2, Using alloy steel or hard alloy on sealing surface, with long service life.
3, The valve disc is in conical shape, the valve stem set down with a gasket sealing structure,ensure excellent sealing performance, the stem will be carried with Nitriding treatment, has the advantages of good corrosion resistance and friction resistance;

Standard

Design & Manufacture	Design Standard	Face-to-Face	End Connection	Inspection and Testing	Pressure -Temperature
	JB/T7746	JB/T7746	HG/T20592 JB/T79 GB/T9113	JB/T9092 GB/T13927	GB/T12224 JB/T7746

Performance Specification

Test / PN	Shell Test	Sealing test	Air sealing test	Applicable Temperature(℃)	Applicable Medium
1.6	2.4	1.76	0.6	≤425	Water, oil, steam
2.5	3.8	2.76			
4.0	6.0	4.4			
6.4	9.6	7.04			
10.0	15.0	11.0			
16.0	24.0	17.0			

Parts and Materials

Part name	Parts material		
Body/Bonnet	WCB	304SS	316SS
Disc/Seat	420	304SS	316SS
Stem	420	304SS	316SS
Sealing ring	410+HF 1Cr13+HF	304SS+STL	316SS+STL
Packing	Flexible graphite	PTFE	PTFE
Gasket	18-8 Flexible graphite		
Bolt	35/35CrMo	304SS	316SS
Applicable Temperature	-29~425℃	-40~200℃	-40~200℃
Applicable Medium	Water, steam, oil	Nitric acid	Acetic acid

Flowtecal

Forged Steel NPT ,SW Globe Valve

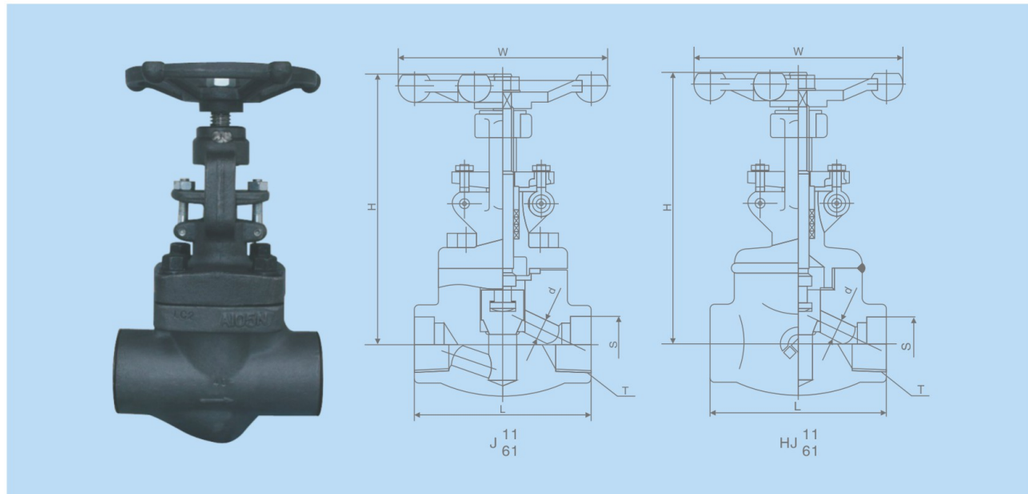

Application Specification

1、Design & manufacture：ASME/ANSI B16.34；API 602；JB/T7746
2、End connection：
(1)Socket weld end：ASME/ANSI B16.11；JB/T1751
(2)Threaded end：ASME/ANSI B1.20.1(NPT)；GB/T7306-87(RC)
3、Structure feature：B.B Or W.B；OS&Y
4、Main body material：A105; LF2; F5; F11; F22; F304; F316;F304L; F316L
5、Inspection and testing：API 598；JB/T9092；GB/T13927

Main Overall Dimension and Connection Dimension

(PN 1.6~14.0 MPa;Class150~800)

DN(mm)	R.P	8	10	15	20	25	32	40	50	-
NPS(in)	R.P	1/4	3/8	1/2	3/4	1	1 1/4	1 1/2	2	-
DN(mm)	F.P	-	8	10	15	20	25	32	40	50
NPS(in)	F.P	-	1/4	3/8	1/2	3/4	1	1 1/4	1 1/2	2
d	R.P	7	10	10	13	18	24	29	36.5	-
	F.P	-	7	10	13	18	24	29	36.5	46.5
L	R.P	79	79	79	92	111	120	152	172	-
	F.P	-	79	79	92	111	120	152	172	200
H(Open)	R.P	153	153	158	163	193	250	250	291	-
	F.P	-	153	158	163	193	250	250	291	350
W	R.P	100	100	100	100	125	160	160	180	-
	F.P	-	100	100	100	125	160	160	180	240
WT(kg)	R.P	1.9	1.8	1.7	2.1	3.3	7.5	7.5	11.4	-
	F.P	-	2.1	1.9	2.3	3.6	7.8	8.2	12.0	15.0

Note:1,Welded bonnet gate valve(WB), code G69W；Bolted bonnet "B.B" ,code "W" omit，for example：G6902-****。
2, The former "F" in code indicates the full bore , such as F25, no mark for reduced bore。

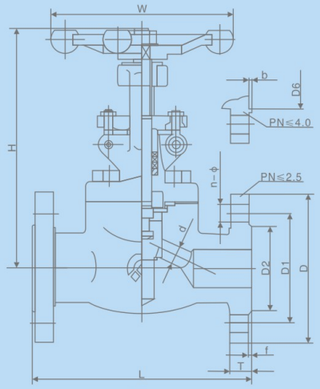

J41

Performance Specification

1、Design & manufacture：GB/T12224；JB/T7746
2、Face-to-Face：JB/T96；GB/T12221
3、End connection：JB/T82.1 ~ 82.4-94
4、Structure feature：B.B OrW.B；OS&Y
5、Main body material：A105；LF2；F5；F11；F22；F304；F304L；F316L
6、Inspection and testing：GB/T13927；JB/T9092

Dimensions and Weight

(PN 1.6~10.0 MPa)

PN	DN(mm)	15	20	25	32	40	50	65
1.6	d(Reducing)	10	13	19.1	24	31.8	38.1	48.5
2.5								
4.0								
6.4								
10.0								
1.6	L	130	150	160	190	200	230	290
2.5								
4.0								
6.4		170	190	210	230	260	300	340
10.0								
1.6	H(Open)	158	163	193	250	250	291	350
2.5								
4.0								
6.4								
10.0								
1.6	W	100	100	125	160	160	180	240
2.5								
4.0								
6.4								
10.0								
1.6	WT(kg)	3.8	4.5	5.6	6.3	9.1	13.7	24.5
2.5		4.0	4.7	5.8	6.5	10.7	15.3	26.2
4.0		4.3	5.0	6.3	7.0	12.3	18.8	27.7
6.4		4.8	5.6	8.0	9.4	13.7	23.7	32.0
10.0		5.4	6.6	9.8	10.5	18.6	27.6	35.0

Note: Nominal pressure PN6.4MPa, Ring joint flange (RJ) according to JB77-58 .

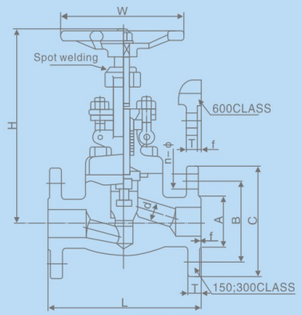

J41

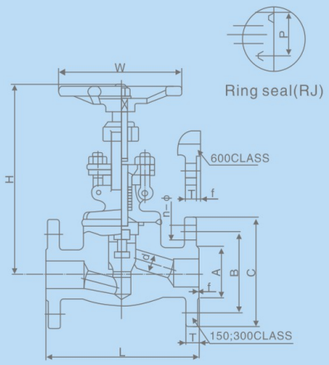

HJ41

Performance Specification

1、Design&manufacture：ASME/ANSI B16.34； API 602
2、Face-to-Face：ANSME/ANSI B16.10
3、End connection：ASME/ANSI B16.5
4、Structure feature：B.B Or W.B；OS&Y-Reducing(R.P)
5、Main body material：A105; LF2; F5; F11; F22; F304;F316; F304L; F316L Etc.
6、Inspection and testing：API 598

Dimensions and Weight

(Class150~600)

Pressure level	NPS(in)	1/2	3/4	1	1 1/4	1 1/2	2	1 1/2
150	d(Reducing)	10	13	19.1	24	31.8	31.8	48.5
300								
600								
150	L	108	117	127	140	165	203	216
300		152	178	203	216	229	267	292
600		165	190	216	229	241	292	330
150	H(Open)	158	163	193	250	250	291	350
300								
600								
150	W	100	100	125	160	160	180	240
300								
600								
150	WT(kg)	4.5	6.9	9.8	13.5	19.5	28.0	35.4
300		4.8	7.7	11.0	16.8	21.2	32.6	38.0
600		5.6	7.8	12.5	17.0	23.5	38.8	42.6

Note：1. CLASS≤600，RF flange for standard valve, if RJ or LF is required ,then it should make special mark.

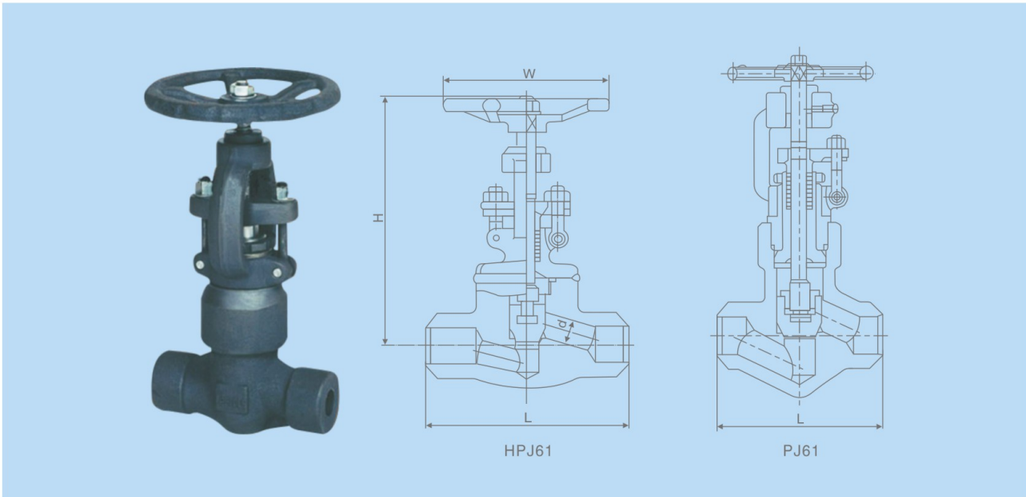

Application Specification

1、Design & manufacture：ASME/ANSI B16.34；API 602;JB/T7746
2、Face-to-Face：ASME/ANSI B16.10 JB/T96-95
3、End connection：
(1)Flange end：ASME/ANSI B16.5；JB/T82.1~82.4-94
(2)Socket weld end：ASME/ANSI B16.11；JB/T1751
(3)Threaded end：ASME/ANSI B1.20.1(NPT)；GB/T7306-87-(RC)
4、Structure feature：B.B；OS&Y-Full bore(F.P)
5、Material of major parts：A105; LF2; F5; F11; F22; F304; F316; F304L; F316L
6、Inspection and testing：API 598；GB/T13927

Performance Specification

(PN 16.0~25.0 MPa;Class900~1500)

NPS (in)			1/2	3/4	1	1 1/4	1 1/2	2
DN(mm)			15	20	25	32	40	50
d(Reducing)			13	18	24	29	36.5	46.5
L	SW/ NPT(RC)		140	140	140	178	178	216
	Flange	API	216	229	254	279	305	271.2
		PN16.0	170	190	210	230	260	300
H(Open)			207	207	240	258	290	337
W			125	125	160	160	180	240
WT(kg)	SW/NPT		11.2	10.5	10.1	21.0	19.6	40.4
	≤1500 Class(RJ)		15.5	16.9	18.9	25.5	34.3	52.8
	PN16.0 MPa		14.3	15.2	17.0	22.6	30.0	48.1

Note: Pressure seal structure is recommended for high temperature and high pressure pipeline structure because of the excellent sealing.

Application

Bellow sealed globe valves are suitable to working condition under nominal pressure PN1.6~16.0MPa , and under the working temperature of -46~550℃ ,such as petroleum, chemical, pharmaceutical, chemical fertilizer, electric power industry and other pipeline, with the function of cutting off or connecting medium on the pipeline.

Features

1, Reasonable structure design, good sealing, excellent performance, attractive appearance;
2, The sealing surface is welded with Co based carbide which have good performance in wear resistance, corrosion resistance, scratch resistance, long service life;
3, The stem have been treated with the quenching tempering and nitriding treatment, which have good corrosion resistance and scratch resistance;
4, Double sealing design;
5, Stem position indication is available;
6, The material of components and flange, butt-welded dimension are designed and selected according to actual conditions or reasonable requirements of end user , to meet the needs of various projects.

Technical Specification

Structural style	BB-BG-OS&Y		
Drive way / Standard	Manual, Electric, Pneumatic		
	GB	API	DIN
Design Standard	GB/T 12235	BS1873-1975/ ASME B16.34	DIN3356
Face-to-Face	GB/T 12221	ASME B16.10	DIN3202
Flange Connection	GB/T 9113	ASME B16.5	DIN2543-2545
Test and Inspection	GB/T 13927	API 598	DIN3230

Note: Flange connection can be designed and manufactured according to the requirement of customers.

Performance Specification

PN(MPa)	Shell test pressure (MPa)	Seal test pressure (MPa)	Applicable Temperature(℃)	Applicable Medium
1.6	2.4	1.76	≤350	Water, steam, oil, etc
2.5	3.75	2.75		
4.0	6.0	4.4		
6.4	9.6	7.04		

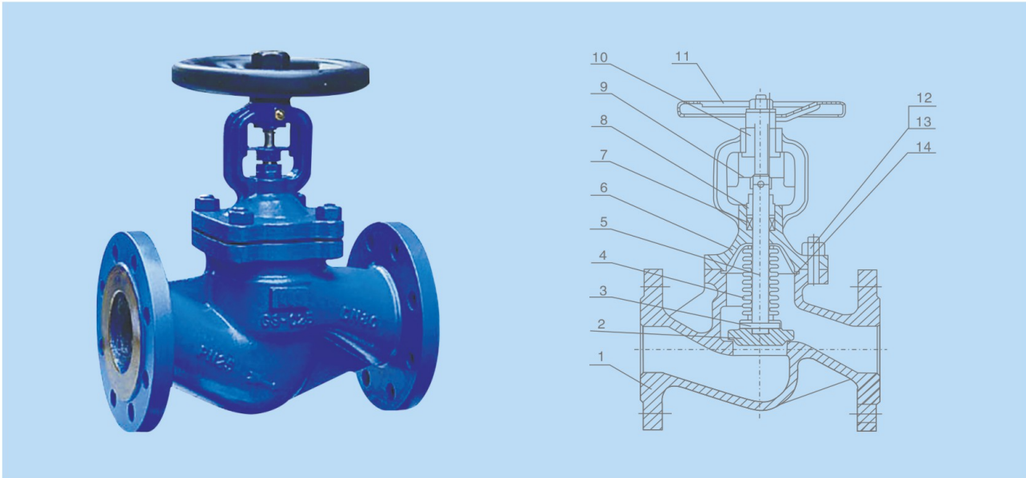

Parts and Materials

No.	Name	Material
1	Body	GS-C25 1.7363、1.4308、1.4408、1.4306、1.4301 ASTM:WCB,CF8,CF8M,CF3,CF3M
2	Disc	ASTM A182-Gr.F6a ASTM A182-F22 ASTM A182-F304、F316、F321、F304L、F316L
3	Pin	ASTM A182-Gr.F6a ASTM A182-F22 ASTM A182-F304、F316、F321、F304L、F316L
4	Bellow	304、316、316L
5	Stem	ASTM A182-Gr.F6a ASTM A182-F22 ASTM A182-F304、F316、F321、F304L、F316L
6	Bonnet	GS-C25 1.7363、1.4308、1.4408、1.4306、1.4301 ASTM:WCB,CF8,CF8M,CF3,CF3M
7	Packing	Flexible graphite
8	Packing gland	GS-C25 1.7363、1.4308、1.4408、1.4306、1.4301 ASTM:WCB,CF8,CF8M,CF3,CF3M
9	Location unit	25、45、304、316
10	Stem Nut	Copper alloy ZQA19-4
11	Handwheel	WCB、QT400-18
12	Stud	ASTM A193-B7、A193-B8、A193-B8M
13	Hexagon nut	ASTM A194-2H、A194-8、A194-8M
14	Gasket	Flexible graphite + Stainless steel、PTFE

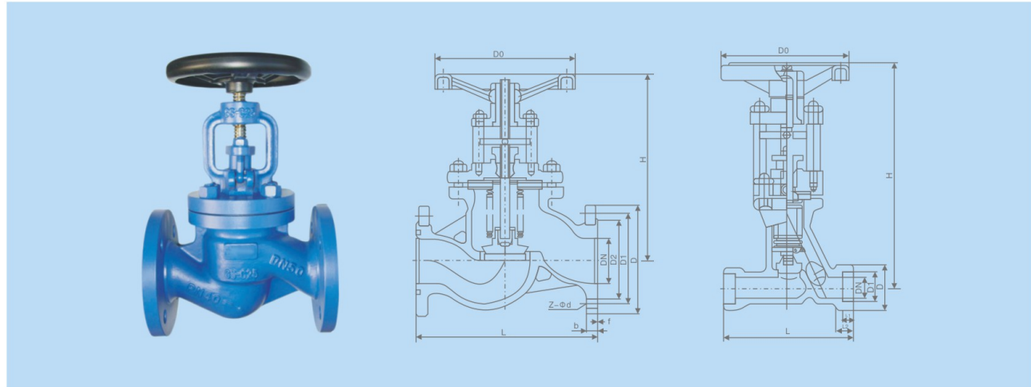

Dimensions and Weight

(PN1.6~4.0MPa)

DN(mm)	L	D	D2	L1	L2	H	D0	WT(kg)
			GC6322-****	GC6323-****	GC6324-****			
15	110	34	22.5	10	18	214	22.5	1.9
20	130	40	28.5	11	18	242	28.5	2.3
25	140	48	34.5	12	20	245	34.5	3.4
32	160	56	43	14	22	296	43	5.2
40	180	64	49	15	25	337	49	7.3
50	230	85	61	18	28	342	61	10

Dimensions and Weight

DN(mm)	L	D	D1	D2	b	f	Z-Φd	H	D0	WT(kg)
					G6322-****					PN1.6MPa
15	130	95	65	47	14	2	4-Φ13.5	202	120	5
20	150	105	75	58	14	2	4-Φ13.5	231	140	7
25	160	115	85	68	14	2	4-Φ13.5	231	140	9
32	180	140	100	78	16	2	4-Φ17.5	286	160	12
40	200	150	110	88	16	3	4-Φ17.5	317	200	16
50	230	165	125	102	16	3	4-Φ17.5	317	200	19
65	290	185	145	122	18	3	8-Φ17.5	331	240	23
80	310	200	160	123	20	3	8-Φ17.5	402	240	30
100	350	220	180	158	20	3	8-Φ17.5	416	320	42
125	400	250	210	184	22	3	8-Φ17.5	467	360	63
150	480	285	240	212	24	3	8-Φ22	525	360	90
200	600	340	295	268	26	3	12-Φ22	611	500	150
					G6323-****					PN2.5MPa
15	130	95	65	47	16	2	4-Φ13.5	202	120	5
20	150	105	75	58	16	2	4-Φ13.5	231	160	7
25	160	115	385	68	16	2	4-Φ13.5	231	160	9
32	180	140	100	78	18	2	4-Φ17.5	286	160	12
40	200	150	110	88	18	3	4-Φ17.5	317	200	19
50	230	165	125	102	20	3	4-Φ17.5	317	200	24
65	290	185	145	122	22	3	8-Φ17.5	330	280	33
80	310	200	160	133	22	3	8-Φ17.5	402	280	44
100	350	235	190	158	24	3	8-Φ22	416	320	60
125	400	270	220	184	28	3	8-Φ26	467	360	72
150	480	300	250	212	30	3	8-Φ26	525	360	98
200	600	360	310	278	30	3	12-Φ27	611	500	169
					G6324-****					PN4.0MPa
15	130	95	65	47	16	2	4-Φ13.5	202	120	5
20	150	105	75	58	16	2	4-Φ13.5	228	160	7
25	160	115	85	68	16	2	4-Φ13.5	228	160	9
32	180	140	100	78	18	2	4-Φ17.5	274	160	12
40	200	150	110	88	20	3	4-Φ17.5	345	200	16
50	230	165	125	102	22	3	4-Φ17.5	396	200	23
65	290	185	145	122	22	3	8-Φ17.5	399	280	33
80	310	200	160	133	24	3	8-Φ17.5	405	280	43
100	350	235	190	158	28	3	8-Φ22	460	320	69

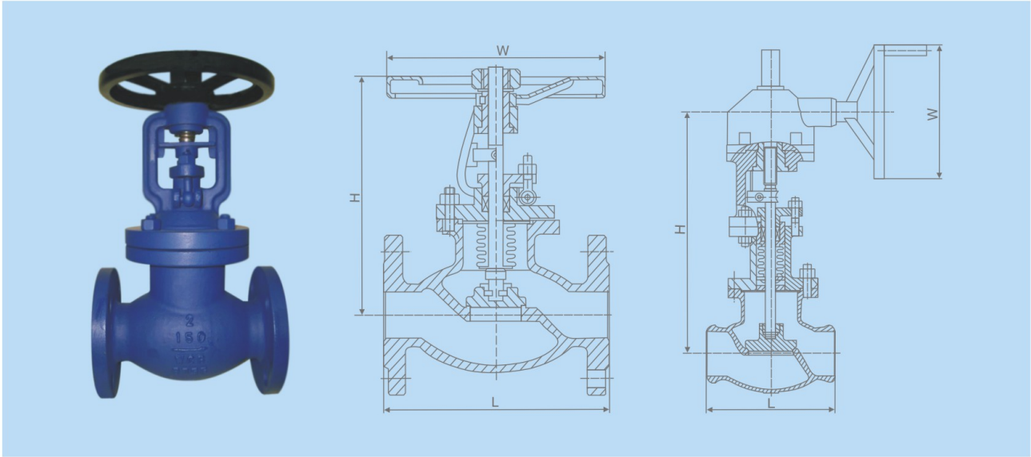

Standard

Design & Manufacture	Design Standard	Face-to-Face	End Connection	Inspection and Testing
	BS1873-1975	ASME B16.10	ASME N16.5	API598

Dimensions and Weight

Unit：mm

Type		G6301-****														
Pressure Rate		150LB														
Size	mm	15	20	25	32	40	50	65	80	100	125	150	200	250	300	350
	in	1/2	3/4	1	1 1/4	1 1/2	2	2 1/2	3	4	5	6	8	10	12	14
L		108	117	127	140	165	203	216	241	292	356	406	495	622	698	787
H		241	241	241	280	286	368	387	400	457	520	609	698	762	876	990
W		120	140	140	180	200	220	260	280	300	320	340	400	450	450	450
WT(Kg)		4	5	6	10	13	18	30	35	55	75	104	200	300	390	610
Type		G6302-****														
Pressure Rate		300LB														
Size	mm	15	20	25	32	40	50	65	80	100	125	150	200	250	300	350
	in	1/2	3/4	1	1 1/4	1 1/2	2	2 1/2	3	4	5	6	8	10	12	14
L		152	178	203	215	229	267	292	318	356	400	444	559	622	711	762
H		241	241	283	320	322	399	438	450	584	610	660	762	850	1085	1187
W		120	140	140	180	200	220	260	280	300	320	340	400	450	450	450
WT(Kg)		6	7	10	15	20	25	30	52	88	115	160	259	420	595	876
Type		G6303-****														
Pressure Rate		600LB														
Size	mm	15	20	25	32	40	50	65	80	100	125	150	200	250	300	350
	in	1/2	3/4	1	1 1/4	1 1/2	2	2 1/2	3	4	5	6	8	10	12	14
L		165	190	216	229	241	267	330	356	432	508	559	660	787	838	889
H		240	280	320	320	390	399	480	508	635	750	914	1016	1219	1330	1560
W		140	140	160	160	180	220	250	250	350	400	450	500	600	720	760
WT(Kg)		7	10	16	22	29	25	50	90	150	230	300	510	850	1120	1400
Type		G6304-****														
Pressure Rate		900LB														
Size	mm	15	20	25	32	40	50	65	80	100	125	150	200	250	300	350
	in	1/2	3/4	1	1 1/4	1 1/2	2	2 1/2	3	4	5	6	8	10	12	14
L		229	229	254	279	305	368	419	381	457	559	610	737	838	965	1029
H		280	330	350	430	508	596	430	635	774	860	1040	1330	1560	1650	1780
W		160	160	180	180	250	250	320	350	450	550	600	720	760	820	890
WT(Kg)		10	16	23	37	49	65	75	120	200	350	410	790	1300	1500	1800

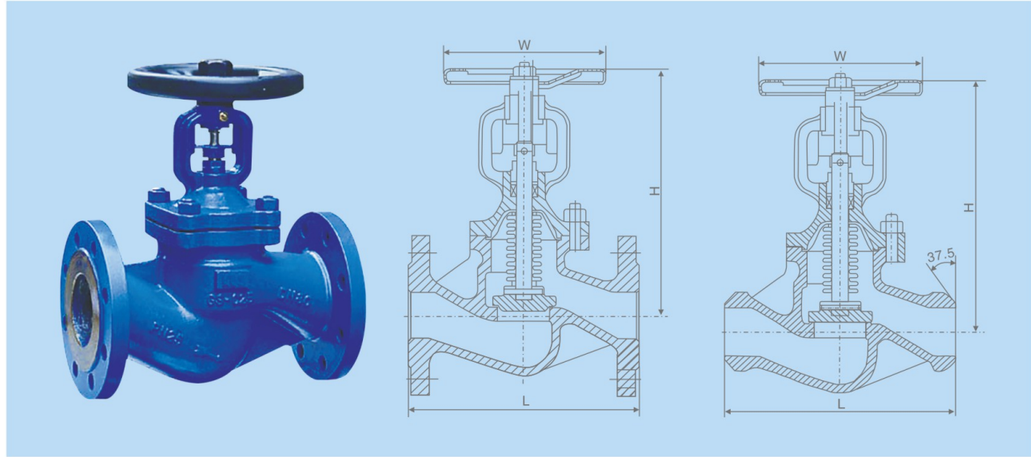

Type	G6312-****														
Pressure Rate	PN16														
Size	15	20	25	32	40	50	65	80	100	125	150	200	250	300	350
L	130	150	160	180	200	230	290	310	350	400	480	600	730	850	980
H	195	200	220	225	235	250	260	265	370	400	515	550	600	630	680
W	130	130	130	130	150	150	180	180	200	200	400	450	450	500	500
WT(Kg)	4	4.5	5	7	9	12.5	18	23	41	54	90	160	260	410	610

Type	G6313-****														
Pressure Rate	PN25														
Size	15	20	25	32	40	50	65	80	100	125	150	200	250	300	350
L	130	150	160	180	200	230	290	310	350	400	480	600	730	850	980
H	195	200	220	225	235	250	260	265	370	400	515	550	600	630	680
W	130	130	130	130	150	150	180	180	200	200	400	450	450	450	450
WT(Kg)	4	4.5	5	7.5	9.5	13	19	24	43	57	95	168	300	510	680

Type	G6314-****														
Pressure Rate	PN40														
Size	15	20	25	32	40	50	65	80	100	125	150	200	250	300	350
L	130	150	160	180	200	230	290	310	350	400	480	600	730	850	980
H	195	200	220	225	235	250	260	265	370	400	515	550	600	630	680
W	130	130	130	130	150	150	180	180	200	200	400	450	450	500	500
WT(Kg)	4	4.5	5	8	10	13.5	20	25	45	60	98	171	340	580	780

Flowtecal

Model No. of Flowtecal Check Valve

DN50	C80	01	F	–	W	O	S	M	RF
▼ 1	▼ 2	▼ 3	▼ 4		▼ 5	▼ 6	▼ 7	▼ 8	▼ 9

1 Nominal diameter

DN 50 (Or 2")

2 Valve model

C80 Compact swing check valve
C81 Compact lifting check valve
C82 Compact vertical lift check valve
C83 Vertical lift check valve
C84 Swing check valve
C85 Lifting check valve
C86 Wafer dual plate swing check valve
C87 Wafer single plate swing check valve
C88 Wafer lifting check valve
C89 Non slam silence check valve
C8D Non slam dual plate check valve

3 Valve pressure rating

01 ANSI 150Lb
02 ANSI 300Lb
03 ANSI 600Lb
04 ANSI 900Lb
05 ANSI 1500Lb
11 DIN PN10
12 DIN PN16
13 DIN PN25
14 DIN PN40
15 DIN PN64
16 DIN PN100
21 GB PN10
22 GB PN16
23 GB PN25
24 GB PN40
25 GB PN64
26 GB PN100

4 Special valve code

Standard valve omit this code
F PFA Lining
F_{46} F_{46} Lining
E EPDM Coating
N NBR Coating

5 Body material

D Ductile iron
W A216–WCB
0 CF8 / 304SS
1 CF8M / 316SS
2 CF3M / 316L
3 Duplex stainless steel
5 Other material

6 Disc material

D Ductile iron
W A216–WCB
B Bronze
0 CF8 / 304SS
1 CF8M / 316SS
2 CF3M / 316L
3 Duplex stainless steel
5 Other material

7 Stem material

W 45#Steel
S 420SS Or 2Cr13
H 17–4PH
0 304SS
1 316SS
5 Other material

8 Seat material

M Hardening treatment
0 304SS
1 316SS
S Stellite
P PTFE
E EPDM
N NBR

9 Connection

RF
TG
WF
BW
SW
NPT
B BPST
D DIN2999 SCREW

Flowtecal

Check Valve Structure

Flowtecal

Check Valve Structure

Features

Swing check valves are suitable to working condition under pressurePN1.6~42.0MPa(CL150–2500) , working temperature of –46~570 ℃ ,such as petroleum, chemical, pharmaceutical, chemical fertilizer, electric power industry and other pipeline, to prevent the backflow.

1, Reasonable structure design, good sealing, excellent performance, attractive appearance;
2, The sealing surfaces are welded with Co based carbide which have good performance in wear resistance, corrosion resistance, scratch resistance, long service life;
3,The built in stem and pin can reduce the leakage;
4,The material of components and flange, butt–welded dimension are designed and selected according to actual conditions or reasonable requirements of end user , to meet the needs of various projects.

Features

Flanged type lifting check valves are suitable to working condition under pressure PN1.6~42.0MPa(CL150–2500) , and under the working temperature of –46~550℃ ,such as petroleum, chemical, pharmaceutical, chemical fertilizer, electric power industry and other pipeline,to prevent the backflow.

1, Reasonable structure design, good sealing, excellent performance, attractive appearance;
2, The sealing surfaces are welded with Co based carbide which have good performance in wear resistance, corrosion resistance, scratch resistance, long service life;
3, The material of components and flange, gasket dimension are designed and selected according to actual conditions or reas–onable requirements of end user , to meet the needs of various projects.

Major Parts

No.	Name	No.	Name
01	Body	08	Spacer
02	Bonnet	09	Nut
03	Seat	10	Shaft & Pin
04	Disc	11	Nut
05	Arm	12	Stud
06	Yoke	13	Hexagon headed bolt
07	Middle gasket	14	Eyebolt

Flowtecal

C84**Swing Check Valve

Application

Swing check valve also known as one–way valve or non return valve, with the function to prevent the backflow of medium. Opening and closing parts is working by the media flow, in order to prevent the backflow of the medium .Check valve are automatic valves, mainly used on one way flow service with the pressure of PN16.~6.4MPa,working pressure –29～550℃, such as petroleum, chemical, pharmaceutical, chemical fertilizer, electric power industry and other pipeline, to prevent the backflow. Normally the valve should be installed horizontally.

Features

Swing check valve is designed with built–in arm swing structure, all moving components are designed inside the body ,the leakage position is only focus on the gasket and sealing ring on middle flange .The connection of valve arm and disc are designed in spherical surface connection, so the disc can work freely in the range of 120 degrees.

Standard

Design Standard	API6D,BS1868	GB/T 12236
Pressure–temperature rating	ASME B16.34	GB/T 12224
Face–to–Face	ASME B16.10	GB/T 1222、 GB/T 15188.1
Flange drilling	ASME B16.5	GB/T 9113.1、 JB/T 79.1
Butt weld end connection	ASME B16.34	GB/T 12224
Test and Inspection	API598	JB/T 9092 GB/T13927

Performance Specification

Nominal Pressure(Lb)		150	300	600	900		
Shell Test	MPa	3.1	7.8	15.3	23.1		
	Lbf/in^2	150	1125	2225	3350		
Water Seal Test	MPa	2.2	5.6	11.2	16.8		
	Lbf/in^2	315	815	1630	2440		
Air sealing test	MPa	0.5~0.7					
	Lbf/in^2	60~100					
Test pressure (MPa)	PN	PN1.6	PN2.5	PN4.0	PN6.4	PN10.0	PN16.0
	Shell Test	2.4	3.75	6.0	9.6	15.0	24.0
	Pressurization	1.76	2.75	4.4	7.04	11.0	17.6
	Low pressure seal	0.6					

Parts and Materials

Part name	WCB	WC6	LCB	CF8	CF8M
Body	WCB	WC6	LCB	CF8	CF8M
Seat	25#	304SS	304SS	304SS	316SS
Disc	WCB	WC6	LCB	CF8	CF8M
Arm	WCB	WC6	LCB	CF8	CF8M
Shaft or Pin	1Cr13	304SS	304SS	304SS	316SS
Connection yoke	WCB	WC6	LCB	CF8	CF8M
Gasket	Flexible graphite	Flexible graphite	Flexible graphite	Flexible graphite	Flexible graphite
Bonnet	WCB	WC6	LCB	CF8	CF8M
Stud	35CrMoA	35CrMoA	35CrMoA	304SS	316SS
Nut	45#	35CrMoA	35CrMoA	304SS	316SS

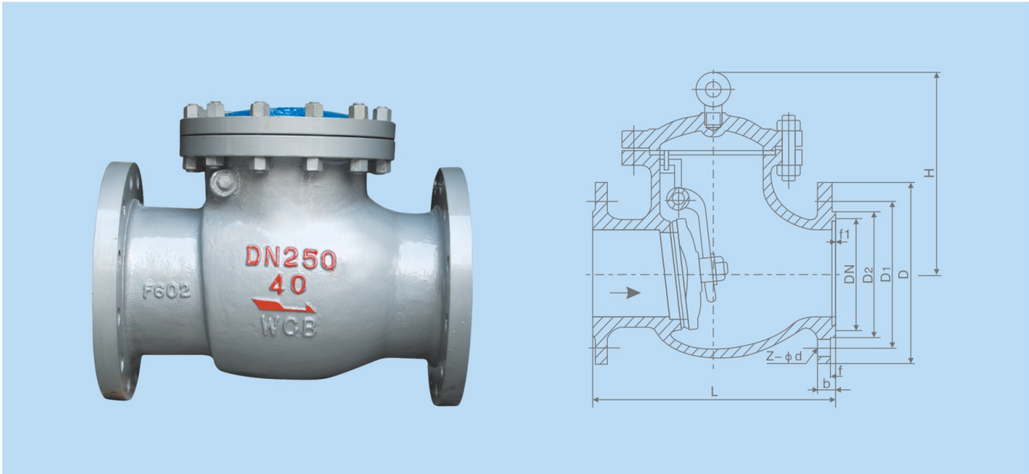

Dimensions and Weight

DN(mm)	L	D	D1	D2	b	Z-ϕd	H	WT (kg)
C8422-****								PN1.6MPa
50	230	160	125	100	20	4-ϕ18	135	21
65	290	180	145	120	20	4-ϕ18	142	28
80	310	195	160	135	22	8-ϕ18	165	38
100	350	215	180	155	24	8-ϕ18	180	58
125	400	245	210	185	26	8-ϕ18	210	92
150	480	280	240	210	28	8-ϕ23	233	130
200	500	335	295	265	30	12-ϕ23	304	210
250	550	405	355	320	32	12-ϕ25	348	294
300	650	460	410	375	34	12-ϕ25	390	367
350	750	520	470	435	38	16-ϕ25	430	410
400	850	580	525	485	40	16-ϕ30	468	461
450	950	640	585	545	40	20-ϕ30	523	570
500	1150	705	650	608	46	20-ϕ34	525	850
C8423-****								PN2.5MPa
50	230	160	125	100	22	4-ϕ18	160	22
65	290	180	145	120	24	8-ϕ18	175	29
80	310	195	160	135	26	8-ϕ18	185	38
100	350	230	190	160	30	8-ϕ23	220	61
125	400	270	220	188	32	8-ϕ25	248	96
150	480	300	250	218	32	8-ϕ25	276	132
200	550	360	310	278	36	12-ϕ25	350	213
250	650	425	370	332	40	12-ϕ30	410	297
300	750	485	430	390	42	16-ϕ30	430	372
350	850	550	490	448	44	16-ϕ34	518	415
400	950	610	550	505	48	16-ϕ34	560	480
450	1025	660	600	555	50	20-Φ34	582	610
500	1150	730	660	610	56	20-ϕ41	618	920

Dimensions and Weight

(PN4.0MPa)

DN(mm)	L	D	D1	D2	D6	b	f	F1	Z-ϕd	H	WT (kg)
C8424-****											
50	230	160	125	100	88	20	3	4	4-ϕ18	169	22
65	290	180	145	120	110	22	3	4	8-ϕ18	173	29
80	310	195	160	135	121	22	3	4	8-ϕ18	185	38
100	350	230	190	160	150	24	3	4.5	8-ϕ23	220	61
125	400	270	220	188	176	28	3	4.5	8-ϕ25	248	96
150	480	300	250	218	204	30	3	4.5	8-ϕ25	270	132
200	550	375	320	282	260	38	3	4.5	12-ϕ30	342	213
250	650	445	385	345	313	42	3	4.5	12-ϕ34	401	297
300	750	510	450	408	364	46	4	4.5	16-ϕ34	423	372
350	850	570	510	465	422	52	4	5	16-ϕ34	455	415
400	950	655	585	535	474	58	4	5	16-ϕ41	510	480

Dimensions and Weight

(PN6.4MPa)

DN(mm)	L	D	D1	D2	D6	b	f	F1	Z-ϕd	H	WT (kg)
C8425-****											
50	300	175	135	105	88	26	3	4	4-ϕ23	177	27
65	340	200	160	130	110	28	3	4	8-ϕ23	197	37
80	380	210	170	140	121	30	3	4	8-ϕ23	212	57
100	430	250	200	168	150	32	3	4.5	8-ϕ25	248	89
125	500	295	240	202	176	36	3	4.5	8-ϕ30	296	135
150	550	340	280	240	204	38	3	4.5	8-ϕ34	380	184
200	650	405	345	300	260	44	3	4.5	12-ϕ34	385	266
250	775	470	400	352	313	48	3	4.5	12-ϕ41	445	396
300	900	530	460	412	364	54	4	4.5	16-ϕ41	474	643
350	1025	595	525	475	422	60	4	5	16-ϕ41	514	815
400	1150	670	585	525	474	66	4	5	16-ϕ48	616	1234

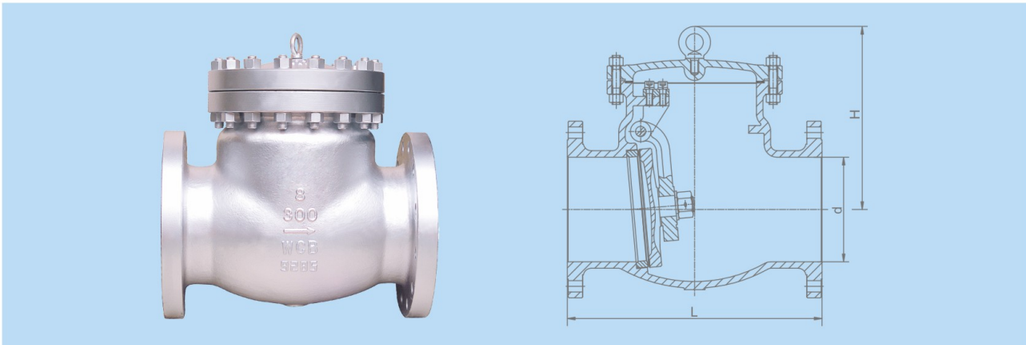

Dimensions and Weight

(Calss 150~300)

NPS(in)	C8401-**** Class 150						C8402-**** Class 300					
	L			d	H	WT (kg)	L			d	H	WT (kg)
	RF	RTJ	BW				RF	RTJ	BW			
2	203	216	203	51	132	15	267	283	267	51	144	20
2 1/2	216	229	216	64	147	20	292	308	292	64	169	35
3	241	254	241	76	176	27	318	333	318	76	210	40
4	292	305	292	102	198	45	356	371	356	102	260	61
5	330	343	330	127	255	58	400	416	400	127	295	80
6	356	368	356	152	320	69	445	460	445	152	326	130
8	495	508	495	203	380	131	533	549	533	203	380	190
10	622	635	622	254	440	219	622	638	622	254	440	296
12	699	711	698	305	480	321	711	727	711	305	520	450
14	787	800	787	337	530	380	838	854	838	337	540	640
16	864	876	864	387	580	560	864	879	864	387	588	850
18	978	991	978	438	618	630	978	994	978	438	670	1030
20	978	991	978	489	657	770	1016	1035	1016	489	720	1330
24	1295	1308	1295	591	760	960	1346	1368	1346	591	850	1950
26	1295	–	1295	633	840	1250	1346	1372	1346	633	920	2300
28	1448	–	1448	684	920	1580	1499	1524	1499	684	1150	2600
30	1524	–	1524	735	980	1950	1594	1619	1594	735	1260	3200

Dimensions and Weight

(Calss 600~900)

NPS(in)	C8403-**** Class 600						C8404-**** Class 900					
	L			d	H	WT (kg)	L			d	H	WT (kg)
	RF	RTJ	BW				RF	RTJ	BW			
2	292	295	292	51	170	28	368	371	368	47	200	48
2 1/2	330	333	330	64	178	40	419	422	419	57	220	75
3	356	359	356	76	246	68	381	384	381	73	280	95
4	432	435	432	102	290	117	457	460	457	98	320	135
5	508	511	508	127	320	155	559	562	559	121	360	200
6	559	562	559	152	360	192	610	613	610	146	400	264
8	660	664	660	200	430	340	737	740	737	190	480	424
10	787	791	787	248	502	515	838	841	838	234	560	730
12	838	841	838	298	554	750	965	968	965	282	632	1070
14	889	892	889	327	595	890	1029	1038	1029	311	680	1180
16	991	994	991	375	680	1303	1130	1140	1130	354	780	1790
18	1092	1095	1092	419	778	1800	1219	1232	1219	400	880	2500
20	1194	1200	1194	464	970	2150	1321	1334	1321	444	1050	3080
24	1397	1407	1397	559	1100	3200	1549	1568	1549	533	1200	4600

Application

Lifting check valves are suitable to working condition under pressure PN1.6~16.0MPa , and the working temperature of –46~550℃ , such as petroleum, chemical, pharmaceutical, chemical fertilizer, electric power industry and other pipeline, to prevent the backflow.

Features

1, Reasonable structure design, good sealing, excellent performance, attractive appearance
2, The sealing surfaces are welded with Co based carbide which have good performance in wear resistance, corrosion resistance, scratch resistance, long service life.
3,The material of components and flange, gasket dimension are designed and selected according to actual conditions or reasonable requirements of end user , to meet the needs of various projects.

Performance Specification

Design Standard		GB/T 12235				
Pressure–temperature rating		GB/T 12224				
Face–to–Face		GB/T 12221				
End Connection		GB/T 9113.1、JB/T 79.1				
Inspection and Testing		JB/T 9092、GB/T 13927				
Test pressure (MPa)	PN	PN1.6	PN2.5	PN4.0	PN6.4	PN10.0
	Shell Test	2.4	3.75	6.0	9.6	15.0
	Seal Test	1.76	2.75	4.4	7.04	11.0
	Low pressure seal	0.6				

Parts and Materials

No.	Body	WCB	CF8	WC6	LCB
1	Body	WCB	CF8	WC6	LCB
2	Disc	WCB	CF8	WC6	LCB
3	Gasket	Flexible graphite +SS304	Flexible graphite +SS304	Flexible graphite +SS304	Flexible graphite +SS304
4	Bonnet	WCB	CF8	WC6	LCB
5	Stud	35CrMoA	0Cr18Ni9(304)	35CrMoA	35CrMoA
6	Nut	45#	0Cr18Ni9(304)	35CrMoA	35CrMoA
7	Spring	60S12Mn	0Cr18Ni9 (304)	0Cr18Ni9 (304)	0Cr18Ni9(304)

Note: To use different material based on different working temperature and medium.

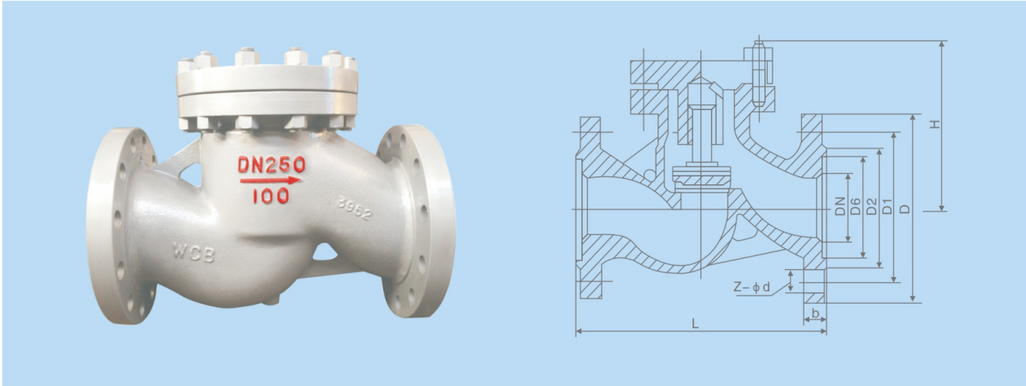

Dimensions and Weight

(PN1.6/2.5MPa)

DN(mm)	L	D	D_1	D_2	b	Z-ϕd	H	WT (kg)
C8522-****								
15	130	95	65	45	14	4-ϕ14	77	3
20	150	105	75	55	14	4-ϕ14	77	4
25	160	115	85	65	14	4-ϕ14	80	5
32	180	135	100	78	16	4-ϕ18	85	7
40	200	145	110	85	16	4-ϕ18	95	9
50	230	160	125	100	16	4-ϕ18	105	10
65	290	180	145	120	18	4-ϕ18	120	20
80	310	195	160	135	20	8-ϕ18	130	30
100	350	215	180	155	20	8-ϕ18	140	39
125	400	245	210	185	22	8-ϕ18	155	50
150	480	280	240	210	24	8-ϕ23	180	70
200	600	335	295	265	26	12-ϕ23	215	161
250	650	405	355	320	30	12-ϕ25	260	251
300	750	460	410	375	34	12-ϕ25	315	395
C8523-****								
15	130	95	65	45	16	4-ϕ14	100	3.4
20	150	105	75	55	16	4-ϕ14	105	5
25	160	115	85	65	16	4-ϕ14	120	5.7
32	180	135	100	78	18	4-ϕ18	130	9.1
40	200	145	110	85	18	4-ϕ18	135	11.8
50	230	160	125	100	20	4-ϕ18	149	14.4
65	290	180	145	120	22	4-ϕ18	160	23
80	310	195	160	135	22	8-ϕ18	169	30
100	350	230	190	160	24	8-ϕ23	194	44
125	400	270	220	188	28	8-ϕ25	222	65
150	480	300	250	218	30	8-ϕ25	255	99
200	600	360	310	278	34	12-ϕ25	305	190
250	650	425	370	332	36	12-ϕ30	355	315
300	750	485	430	390	40	12-ϕ30	410	450

Dimensions and Weight

(PN4.0MPa)

DN(mm)	L	D	D_1	D_2	D_6	b	Z-ϕd	H	WT (kg)
C8524-****									
15	130	95	65	45	40	16	4-ϕ14	100	4
20	150	105	75	55	51	16	4-ϕ14	105	5.5
25	160	115	85	65	58	16	4-ϕ14	120	6
32	180	135	100	78	66	18	4-ϕ18	130	12
40	200	145	110	85	76	18	4-ϕ18	135	14
50	230	160	125	100	88	20	4-ϕ18	149	18
65	290	180	145	120	110	22	8-ϕ18	160	27
80	310	195	160	135	121	22	8-ϕ18	169	36
100	350	230	190	160	150	24	8-ϕ23	194	50
125	400	270	220	188	176	28	8-ϕ25	225	75
150	480	300	250	218	204	30	8-ϕ25	255	119
200	600	375	320	282	260	38	12-ϕ30	305	217
250	650	445	385	345	313	42	12-ϕ34	360	310
300	750	510	450	408	364	46	12-ϕ34	415	365

Dimensions and Weight

(PN6.4MPa)

DN(mm)	L	D	D_1	D_2	D_6	b	Z-ϕd	H	WT (kg)
C8525-****									
15	170	105	75	55	40	20	4-ϕ14	100	7
20	190	125	90	68	51	22	4-ϕ18	110	11
25	210	135	100	78	58	24	4-ϕ18	125	13
32	230	150	110	82	66	24	4-ϕ23	140	14
40	260	165	125	95	76	24	4-ϕ23	168	20
50	300	175	135	105	88	26	4-ϕ23	170	23
65	340	200	160	130	110	28	8-ϕ23	188	37
80	380	210	170	140	121	30	8-ϕ23	205	46
100	430	250	200	168	150	32	8-ϕ25	230	68
125	500	295	240	202	176	36	8-ϕ30	203	89
150	550	340	280	240	204	38	8-ϕ34	265	131
200	650	405	345	300	260	44	12-ϕ34	310	235

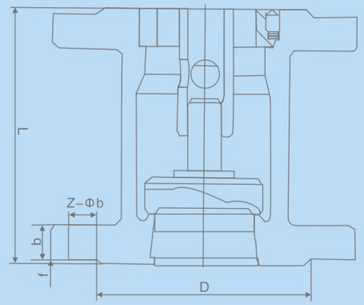

Application

Vertical check valve are widely used on petroleum, chemical, pharmaceutical, power industry and so on.

Features

The disc is lifting along the center position. The sleeve is made of special material with good wear resistance and low friction coefficient. The operation is smoothly and reliable.

Standard

Design & Manufacture	Design Standard	Face-to-Face	End Connection	Inspection and Testing
	GB/T12235 BS1868 API 6D	ASME B16.10 GB/T12221	ASME B16.5 JB/T79	GB/T 13927 API 598 JB/T9092

Performance Specification

Test Pressure	Nominal pressure (MPa)				
	16	25		40	
Shell Test	2.4	3.8		6.0	
Sealing Test	1.8	2.8		4.4	
Body material	WCB	CF8	CF8M	WC6	WC9
Working temperature	≤425℃	≤100℃	≤100℃	≤550℃	≤550℃
Applicable Medium	Water Steam Oil	Nitric acid	Acetic acid	Water,Steam	Water,Steam

Test Pressure

PN(Lb)	Shell Test		Water Seal Test		Air sealing test	
Class	MPa	Lbf/in²	MPa	Lbf/in²	MPa	Lbf/in²
150	3.1	450	2.2	315	0.5-0.7	60-100
300	7.8	1125	5.6	815	0.5-0.7	60-100
600	15.3	2225	11.2	1630	0.5-0.7	60-100

Dimensions and Weight

(PN1.6~4.0MPa)

C8322-****												
DN(mm)	15	20	25	32	40	50	65	80	100	125	150	200
L	105	105	105	150	160	170	180	200	210	275	300	380
D	95	105	115	135	145	160	180	195	215	245	280	335
WT (kg)	–	–	–	–	–	7.9	11	12	19.5	36	47	65

C8323-****											
DN(mm)	20	25	32	40	50	65	80	100	125	150	200
L	105	105	150	160	170	180	200	210	275	300	380
D	105	115	135	145	160	180	195	215	275	300	360
WT (kg)	–	–	–	–	7.9	11	12	20	38	48	70

C8324-****							
DN(mm)	50	65	80	100	125	150	200
L	170	180	200	210	275	300	380
D	160	180	195	230	270	300	375
WT (kg)	7.9	11	12	20	38	48	72

Dimensions and Weight

Class 150

C8301-****													
DN(mm)	25	40	50	65	80	100	125	150	200	250	300	350	400
NPS(in)	1	1-1/2	2	2-1/2	3	4	5	6	8	10	12	14	16
L(RF)	114	146	159	178	190	216	241	254	305	536	457	533	572
D	108	127	152	178	190	229	254	279	343	406	483	533	597
WT(kg)	7	13	20	35	39	55	80	90	182	258	422	515	630

Dimensions and Weight

Class 300

C8302-****													
DN(nn)	25	40	50	65	80	100	125	150	200	250	300	350	400
NPS(in)	1	1-1/2	2	2-1/2	3	4	5	6	8	10	12	14	16
L(RF)	121	152	165	184	200	232	264	279	330	390	495	572	610
D	124	156	165	190	210	254	279	318	381	445	521	584	648
WT(kg)	10	19	25	35	48	60	89	148	230	335	552	700	898

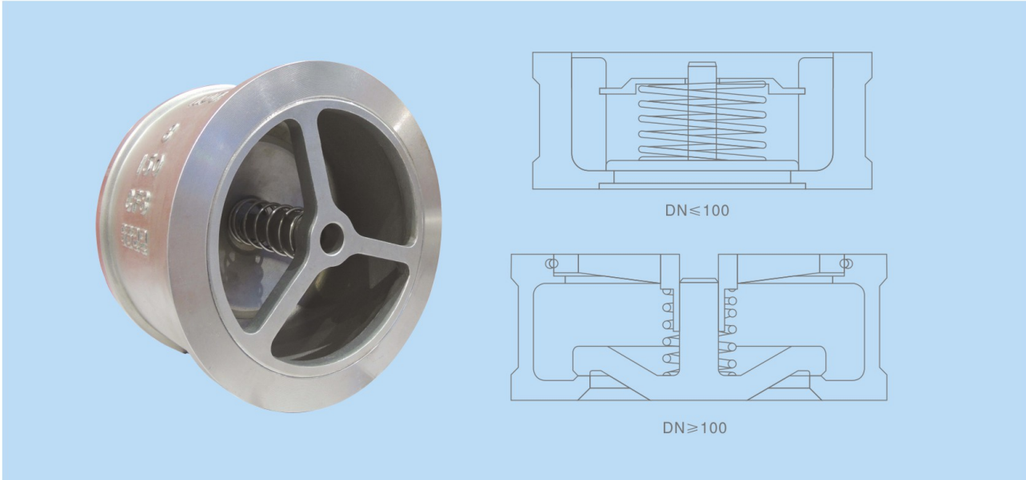

Application

Wafer type lifting check valve is installed in pipeline to provent backflow.It can replace the swing check valve(C84 Series)and flanged lift chenck valve(C85 series),in most of pipeline,to minimize the valve body size and to avoid water hammers when check valve closing.Wafer type lifting check valve are widely used in various pipeline under pressure PN1.0~16.0MPa and working temperature of –196~425℃。

Features

1, Short Face to face length, only 1/4 ~ 1/8 of flanged check valve
2, Small and light weight, only 1/4 ~ 1/20 of flanged valve
3, Quick closing, small hammer pressure
4, Horizontal or vertical pipeline are both workable ,easy to install
5, Small fluid resistance
6, Good sealing performance
7, Short stroke, small impact when closing
8, Compact and simple structure, attractive appearance
9, Long service time, good performance

Standard

Design & Manufacture	Design Standard	Face–to–Face	End Connection	Inspection and Testing	Pressure –Temperature
	API 594 JB/T8937	API 594 JB/T8937	ASME B16.5 JB/T 79.1、GB/T9113 HG/T20592	API 598 JB/T 9092 GB/T13927	ASME B16.34 GB/T 12224

Parts and Materials

Applicable Medium		Water, oil, gas and all kinds of corrosive medium
Optional material	Body	WCB、CF8、CF8M、CF3、CF3M
	Disc	WCB、CF8、CF8M、CF3、CF3M
	Sealing surface	304SS、316S、316L、Stellite、PTFE
	Spring	304SS、316SS、304L、316L

Flowtecal
C88**Series Wafer Type Lifting Check Valve

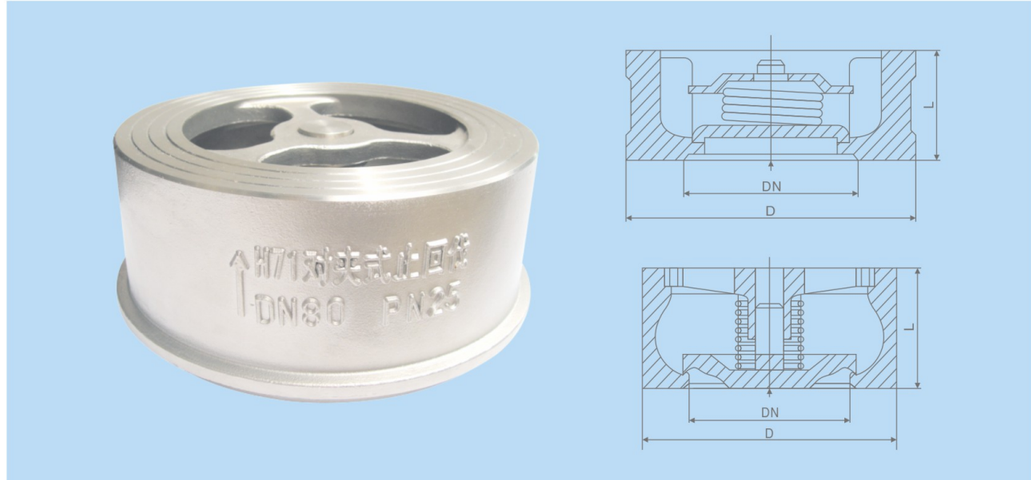

Dimensions and Weight

(PN1.6~4.0MPa)

DN(mm)	L	D			WT (Kg)
		1.6MPa	2.5MPa	4.0MPa	
C8822–**** 、C8823–****、C8824–****					
15	25	48	48	48	0.3
20	31.5	58	58	58	0.5
25	35.5	68	68	68	0.8
32	40	80	80	80	1.3
40	45	90	90	90	1.6
50	56	105	105	105	2.3
65	63	125	125	125	3.3
80	71	140	140	140	4.4
100	80	160	165	165	5.6
125	110	190	195	195	9.2
150	125	215	225	225	12.5
200	160	270	285	290	16.5
250	200	330	340	350	20
300	250	385	400	415	27

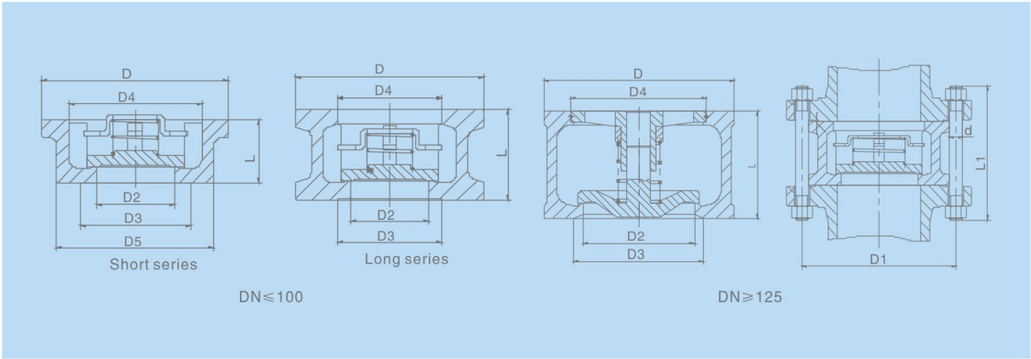

Dimensions and Weight

Size	Pressure level	Size(mm)					WT(Kg)
		L	D	D2	D3	D4	
1/2 (15mm)	150	25	46	15	25	25	0.28
	300	25	52	15	25	25	0.3
	600	25	52	15	25	25	0.4
	900	25	62	15	25	25	0.6
3/4 (20mm)	150	31.5	56	19	30	30	0.42
	300	31.5	65	19	30	30	0.46
	600	31.5	65	19	30	30	0.8
	900	31.5	69	19	30	30	0.9
1 (25mm)	150	35.5	65	24	36	36	0.56
	300	35.5	72	24	36	36	0.6
	600	35.5	72	24	36	36	1
	900	35.5	77	24	36	36	1.2
1 1/4 (32mm)	150	40	74	31	43	43	0.75
	300	40	81	31	43	43	0.8
	600	40	81	31	43	43	1.3
	900	40	87	31	43	43	1.5
1 1/2 (40mm)	150	45	84	39	52	52	1.3
	300	45	94	39	52	52	1.5
	600	45	94	39	52	52	1.8
	900	45	97	39	52	52	2
2 (50mm)	150	56	103	48	62	62	2.1
	300	56	110	48	62	62	2.4
	600	56	110	48	62	62	2.8
	900	56	140	48	62	62	5.5
2 1/2 (65mm)	150	63	122	62	75	75	2.8
	300	63	128	62	75	75	3
	600	63	128	62	75	75	4
	900	63	162	62	75	75	7.5

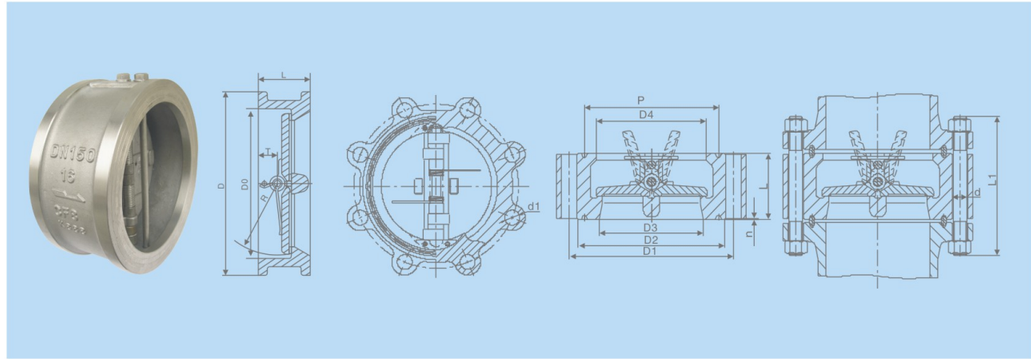

Application

Wafer type dual plate check valve are widely used various pipeline with pressure PN1.0–16.0MPa and working temperature of –196 ~ 425℃,to prevent the backflow.

Features

1, Short face to face length, small and light
2, Select soft or metal sealing material based on different working condition
3, Low pressure to open, the disc can fully open under low pressure gap
4, Quick disc closing, small hammer pressure
5, Horizontal or vertical pipeline are both workable ,easy to install
6, The material of components and end connection , dimension of end connection are designed and selected according to actual conditions or reasonable requirements of end user , to meet the needs of various projects.

Standard

Design & Manufacture	Design Standard	Face–to–Face	End Connection	Inspection and Testing
	API6D、API594 JB/T8937	API6D、API594 JB/T8937	ASME B16.5、ASME B16.47 GB/T9113 JB/T79.1 HG/T20592	API598 JB/T9092 GB/T13927

Parts and Materials

Body	Disc	Shaft	Spring	Applicable Medium
WCB(A105)	WCB(A105)	420	304SS	Water, steam, oil, etc Nitric acid and other corrosive medium, Strong oxidizing medium, Acetic acid and other corrosive medium, Urea and other corrosive medium
CF8	CF8	304SS	304SS	
CF3(304L)	CF3	304L	304L	
CF8M(316)	CF8M	316SS	316SS	
CF3M(316L)	CF3M	316L	316L	

Dimensions and Weight

(PN1.0~4.0MPa)

DN(mm)	PN1.0(MPa)		WT(kg)	PN1.6(MPa)		WT(kg)	PN2.5(MPa)		WT(kg)	PN4.0(MPa)		WT(kg)
	L	D		L	D		L	D		L	D	
C8621-****、C8622-****、C8623-**** 、C8624-****												
50	60	109	1.8	60	109	1.8	60	109	2	60	109	2.4
65	67	129	2.6	67	129	2.6	67	129	3.2	67	129	3.8
80	73	144	3.6	73	144	4.2	73	144	4.8	73	144	5.6
100	73	164	4.8	73	164	5.2	73	170	6	73	170	7.5
125	83	194	6.3	83	194	6.7	83	198	9	83	198	11
150	98	220	8.7	98	220	9.4	98	228	12	98	228	15
200	127	275	16.5	127	275	18.7	127	288	22	127	293	27
250	146	330	26.2	146	333	29.4	146	343	38	146	355	48
300	181	380	42.3	181	388	48.5	181	403	54	181	420	78
350	184	440	58	184	448	66	184	460	80	222	480	116
400	198	493	76	198	498	90	198	520	118	232	549	152

Dimensions and Weight

Size	Pressure level	L	D1	D2		D3	D4	P	Quantity of bolt hole	Diameter of bolt hole D1		n	WT(kg)
				RF	RJ					in	mm		
12 300(mm)	150	181	432	381	406	305	310	381.001	12	1	25	2	119
	300	181	451	381	413	305	310	381.001	16	1 1/4	32	2	92
	600	229	489	381	413	305	312	381.001	20	1 3/8	35	7	213
	900	292	533.4	381	419	305	312	381	20	1 1/2	38	7	211
14 350(mm)	150	184	476	413	425	350	355	396.876	12	1 1/8	29	2	131
	300	222	514.5	413	457	350	355	419.101	20	1 1/4	32	2	251
	600	273	527	413	457	337	355	419.101	20	1 1/2	38	7	343
	900	356	558.8	413	467	337	355	419.1	20	1 5/8	41	7	612
16 400(mm)	150	191	540	470	483	400	405	454.026	16	1 1/8	29	2	180
	300	232	571.5	470	508	400	405	469.901	20	1 3/8	35	2	342
	600	305	603	470	508	387	400	469.901	20	1 5/8	41	7	476
	900	384	615.9	470	524	387	400	469.9	20	1 3/4	45	7	712
18 450(mm)	150	203	578	533	546	450	455	517.526	16	1 1/4	32	2	203
	300	264	628.5	533	575	450	455	533.401	24	1 3/8	35	2	391
	600	362	654	533	575	438	450	533.401	20	1 3/4	45	7	685
	900	451	685.8	533	594	438	450	533.4	50	2	51	7	1160
20 500(mm)	150	219	635	584	597	500	505	558.801	20	1 1/4	32	2	275
	300	292	686	584	635	500	505	584.201	24	1 3/8	35	2	536
	600	368	724	584	635	489	500	584.201	24	1 3/4	45	7	908
	900	451	749.3	584	648	487	496	584.2	20	1 1/8	54	7	1568
24 600(mm)	150	222	749.5	692	711	600	605	673.101	20	1 1/4	32	2	314
	300	318	813	692	749	600	608	692.151	24	1 5/8	41	2	833
	600	438	838	692	749	591	600	692.151	24	2	51	7	1088
	900	495	901.7	692	772	591	600	692.15	20	2 5/8	67	7	1181
28(700mm)	150(ASME B16.47B)	305	795.5	762	–	700	700	–	40	7/8	35	2	910
30(750mm) (ASME B16.47B)	150	305	846	813	–	746	750	–	44	7/8	22	2	1025
	300	368	921	845	–	735	740	–	36	1 1/2	38	2	1395
32(800mm)	150(ASME B16.47B)	305	900	864	–	796	800	–	48	7/8	22	2	1344
36(900mm) (ASME B16.47B)	150	368	1010	972	–	898	910	–	44	1	25	2	1536
	300	483	1189	1010	–	873	880	–	32	1 3/4	45	2	1862

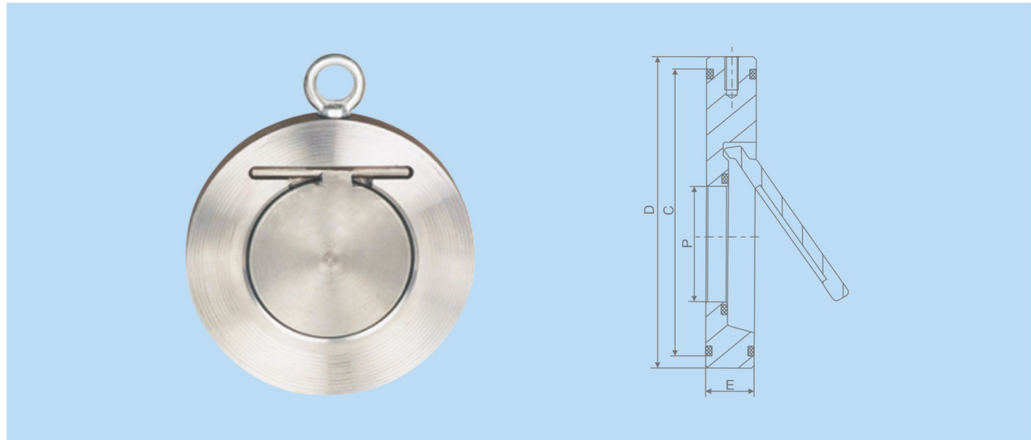

Standard

Design & Manufacture	Design Standard	Face-to-Face	End Connection	Inspection and Testing	Pressure -Temperature
	API 594 API 6D	API594、API 6D DIN3202	JB/T74~90 GB/T 9112~9124	API 598、API 6D	ASME B16.34 ASME B16.47

Parts and Materials

Part name	A Type	B Type
Body	WCB,304SS	316SS
Plate	WCB,304SS	316SS
Seat	NBR/EPDM	VITON
Sealing ring	NBR/EPDM	VITON

Performance Specification

PN	PN16	CL150(PN20)	CL300(PN50)
Sealing Test	1.76MPa	2.2MPa	5.5MPa
Shell Test	2.4MPa	3.0MPa	7.5MPa
Applicable Temperature	NBR: -10~+80℃		
	EPDM: -10~+120℃		
	VITON: -10~+150℃		
Applicable Medium	Water, Oil, Acid, Alkali, Food, Etc		

Dimensions

C87**-****

DN	D			P	E		
	PN16	ANSI 125/150	ANSI 300		PN16	ANSI 150	ANSI 300
40	92	85	95	22	14	19	19
50	109	105	111	32	14	19	19
65	129	124	130	40	14	19	19
80	144	136	149	54	14	19	19
100	164	175	181	70	18	19	19
125	194	197	216	92	18	19	19
150	220	222	251	114	20	19	22
200	275	279	308	154	22	28	28
250	330	340	362	200	26	28	28
300	380	410	422	235	28	38	51
350	440	451	485	280	38	44	51
400	491	515	540	318	44	51	51

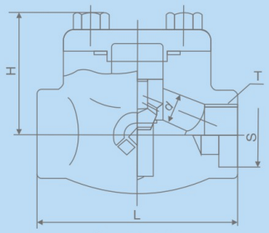

C81**_****

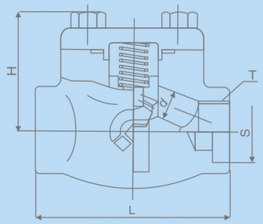

C81**T-****

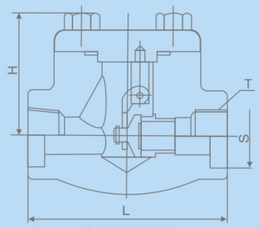

C80**_****

Application Specification

1、Design&manufacture：ASME/ANSI B16.34；API 602；JB/T7746
2、End connection：
(1)Socket weld end：ASME/ANSI B16.11 JB/T1751
(2)Threaded end：ASME/ANSI B1.20.1 GB/T7306
3、Structure feature：B.C/W.C；Swing or lifting
4、Main body material：A105; LF2;F5;F11;F22; F304; F316; F304L; F316L
5、Inspection and testing ：API 598；GB/T13927

Dimensions and Weight

(PN16.0~25.0 MPa;Calss 900~1500)

NPS(in)		1/2	3/4	1	1 1/4	1 1/2	2
DN(mm)		15	20	25	32	40	50
d(Full Bore F.P)		13	18	24	29	36.5	46.5
L	Lifting	111	111	130	152	172	220
	Swing	111	111	120	140	140	162
H	Lifting	79	97	104	120	139	158
	Swing	79	97	115	133	149	166
WT (kg)	Lifting	3.4	4.8	6.9	10.7	8.8	12.3
	Swing	3.6	4.3	10.7	14.6	12.6	15.5

Note: Spring lift check valve can be installed in horizontal or vertical way, usually there is a "T" at the last of the code , for example: C8101T-W0SM

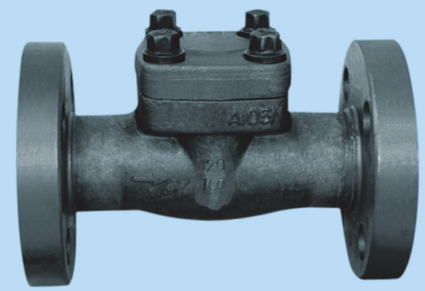

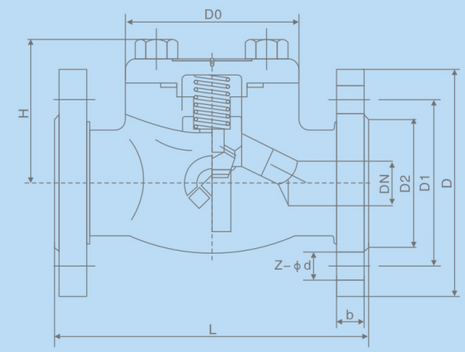

Application Specification

1、Design & manufacture：ASME/ANSI B16.34；API 602；JB/T7746
2、Face-to-Face：ASME/ANSI B16.10；GB/T12221
3、End connection：ASME/ANSI B16.5；JB/T82.1~82.2
4、Structure feature：B.C；Spring lift; Piston movements or swing
5、Main body material：A105;LF2;F5;F11;F22;F304; F316;F304L;F316L
6、Inspection and testing：API 598；GB/T13927

Dimensions and Weight

(PN16.0~25.0 MPa;Calss 150~600)

NPS(in)		1/2	3/4	1	1 1/4	1 1/2	2
DN(mm)		15	20	25	32	40	50
d(Full Bore)		13	18	24	29	36.5	46.5
L	150 Class	108	117	127	140	165	203
	300 Class	152	178	203	216	229	267
	600 Class	165	190	216	229	241	292
	PN1.6~4.0	130	150	160	190	200	230
	PN6.4~10.0	170	190	210	230	260	300
H	Lifting / Swing	61 / 61	78 / 78	84 / 84	103 / 101	118 / 120	130 / 133
WT (kg)	150 Class	3.4	4.4	8.2	8.9	12.0	14.3
	300 Class	3.7	4.8	8.8	9.6	13.7	17.8
	600 Class	4.0	5.8	9.5	10.4	15.6	24.5
	PN4.0	3.5	4.6	8.5	9.2	12.8	16.1
	PN10.0	4.3	6.1	10.0	11.4	17.0	28.7

Note: Spring lift check valve can be installed in horizontal or vertical way, usually there is a "T" at the last of the code ,for example: C8102T-W0SM